TOYOTA

LAND CRUISER

GENUINE PARTS CATALOG

MODEL BJ25·25L

CORRECTION OF PART NUMBER

Page	Figure No.	Correction	Original
16	7-O	1141-1	1141-10
"	"	1141-2	1141-20
"	"	1141-3	1141-30
"	"	1141-4	1141-40
16	7-Q	1143-1	1143-10
"	"	1143-2	1143-20
"	"	1143-3	1143-30
"	"	1143-4	1143-40
16	7-S	1145-1	1145-10
"	"	1145-2	1145-20
"	"	1145-3	1145-30
"	"	1145-4	1145-40
16	7-AE	1139-1	1139-10
"	"	1139-2	1139-20
"	"	1139-3	1139-30
17	"	1139-4	1139-40
17	7-AL	1140-1	1140-10
"	"	1140-2	1140-20
"	"	1140-3	1140-30
"	"	1140-4	1140-40
17	7-AP	1142-1	1142-10
"	"	1142-2	1142-20
"	"	1142-3	1142-30
"	"	1142-4	1142-40
17	7-AR	1144-1	1144-10
"	"	1144-2	1144-20
"	"	1144-3	1144-30
"	"	1144-4	1144-40
17	7-AS	11718-1	11718-10
"	"	11718-2	11718-20
"	"	11718-3	11718-30
"	"	11718-4	11718-40

Correction must be made also on the corresponding Part numbers listed in the INDEX attached at the back page of this catalog.

22	10-B	1758	1578
33	15-U	1559	1959
48	22-H	Insert BJ25. BJ25L in the column "Model".	

松下

INSTRUCTION

(For use with this catalog)

1. This PARTS CATALOG covers all the spare parts of the following models:
   Toyota Land Cruiser Model BJ25, (RHD)
   Toyota Land Cruiser Model BJ25L, (LHD)

2. In this catalog, parts are arranged and illustrated basically by groups of construction.

3. All the component parts forming parts assemblies or complete parts are clearly shown in the corresponding illustrations with marks such as A, B, AA, AO, etc., so as to be easily selected from the list.

4. Model names BJ25 and BJ25L are written either individually or togther in the column of "Model" of each page.

   In case of either BJ25 or BJ25L, the corresponding parts are exclusive to the model so indicated, while in case of both models, common to both models.

   However, particular to Standard (Universal) Parts, model name is written only when they are exclusively applicable to any one of two models.

5. Part number and figure number index is provided on the back pages of this catalog. Furthermore, universal parts used on these models are specifically grouped at the extreme back of this index.

6. Covering Standard Tools and Service Special Tools (S. S. T.), a list is inserted in back page of this catalog.

7. Metric system is followed in the manufacture of all Toyota parts.

8. Part numbers are subject to change. Notice for such changes will be made.

9. Model "F" engine of 105 H. P. can be mounted on the same chassis of Model BJ25 at buyers option. With the "F" engine mounted, the corresponding Model name is changed into FJ25 with no other change than the engine itself. Detailed list of the "F" engine parts is attached to this catalog.

TOYOTA MOTOR SALES CO., LTD.

KEY	PART NO.	PART NAME	PER CAR	MODEL

CAMSHAFT, CAMSHAFT GEAR, VALVE & VALVE ROCKER

(FIG. 8)				
A	1511	Spring, valve rocker shaft lock	4	BJ25. BJ25L
B	1538	Screw, valve adjusting	12	BJ25. BJ25L
C	1539	Nut, valve adjusting screw lock	12	BJ25. BJ25L
D	1545	Spring, valve rocker shaft	4	BJ25. BJ25L
E	1559	Washer, plate	6	BJ25. BJ25L
F	TNN 1008	Nut	4	
G	TNN 1008Z	Nut	4	
H	1563	Washer, valve rocker arm cover	4	BJ25. BJ25L
I	1556	Bolt, valve rocker shaft support	2	BJ25. BJ25L
J	LNT 0504T	Nut	1	
K	F 15333	Screw, valve rocker shaft oil adjusting	1	BJ25. BJ25L
L	1750	Pipe, cylinder head oil	1	BJ25. BJ25L
	F 1055	Valve rocker shaft oil delivery union complete (includes KEY—J, K, M of Fig—8)	1	BJ25. BJ25L
M	F 15312	Union, valve rocker shaft oil delivery	1	BJ25. BJ25L
N	1544	Spring, valve rocker shaft oil connect sleeve	1	BJ25. BJ25L
O	1543	Sleeve, valve rocker shaft oil connect	1	BJ25. BJ25L
P	1509	Spring, valve rocker shaft tension	4	BJ25. BJ25L
Q	1537	Bush, exhaust valve rocker arm	6	BJ25. BJ25L
R	1053	Exhaust valve rocker arm complete (includes KEY—Q of Fig—8)	6	BJ25. BJ25L
S	1536	Bush, intake valve rocker arm	6	BJ25. BJ25L
T	1051	Intake valve rocker arm complete R. H. (includes KEY—S of Fig.—8)	3	BJ25. BJ25L
	1052	Intake valve rocker arm complete L. H.	3	BJ25. BJ25L
	B 14010	Valve rocker shaft assembly R. H. (includes KEY—A~D, P~W of Fig.—8)	1	BJ25. BJ25L
	B 14020	Valve rocker shaft assembly L. H.	1	BJ25. BJ25L
	1054	Valve rocker shaft complete (includes KEY—U, V of Fig.—8)	2	BJ25. BJ25L
U	1540	Shaft, valve rocker	2	BJ25. BJ25L
V	1541	Stopper, valve rocker shaft oil	2	BJ25. BJ25L
W	1546	Support, valve rocker shaft	6	BJ25. BJ25L
X	1557	Bolt, valve rocker shaft support stud	4	BJ25. BJ25L
Y	1547	Guide, intake valve stem	6	BJ25. BJ25L
Z	1548	Guide, exhaust valve stem	6	BJ25. BJ25L
AA	1552	Stopper, valve spring cap	24	BJ25. BJ25L
AB	F 14551	Cap, valve spring	12	BJ25. BJ25L
AC	1562	Spring, valve stop retaining	12	BJ25. BJ25L
AD	F 14531	Spring, valve	12	BJ25. BJ25L
AE	F 14552	Seat, valve spring	12	BJ25. BJ25L

FIG. 1 TOYOTA LAND CRUISER MODELS BJ25 AND BJ25L

SPECIFICATIONS OF TOYOTA LAND CRUISER MODELS BJ25 AND BJ25L

Year of model	1956
Overall length	3,838mm
Overall width	1,665mm
Overall height	1,850mm
Wheelbase	2,285mm
Tread, front	1,390mm
Tread, rear	1,350mm
Ground clearance	210mm
Overhang (up to the end of frame)	715mm
" (from center of rear axle shaft to end of body)	715mm
Chassis weight	1,005kg
Vehicle weight	1,440kg
Passenger (including driver)	6
Gros " vehicle weight rating	1,660kg

FIG. 3 MODELS BJ25 AND BJ25L CHASSIS

Max. speed	99km/h
Grade ability	tan θ 97.5 %
Min. turning radius	5, 300mm
Braking distance (at 50 km/h)	18 m
Fuel tank capacity	50 litre
Tire	6.00-16-6 ply (grip)
Engine	Model B
Clutch	Dry single plate type
Transmission with transfer	Third and top syncro-mesh, four speed forward and one reverse
Propeller shaft	Universal joint, four cross type
Differential	Banjo type
Front axle	Full-floating type
Rear axle	Semi-floating type
Brake	Hydraulic, internal expanding four wheel type
Spring	Semi elliptic leaf spring
Frame	Girder type

INDEX

Summary	Figure-number	Page
ENGINE GROUP		
Engine assembly	**5**	10
Cylinder head	**6**	11~13
Cylinder block	**6**	〃
Valve cover	**6**	〃
Oil pan	**6**	〃
Timing case	**6**	〃
Engine mounting	**6**	〃
Clutch housing	**6**	〃
Crankshaft	**7**	13~17
Connecting rod	**7**	〃
Piston & piston pin	**7**	〃
Flywheel	**7**	〃
Camshaft & gear	**8**	18~20
Valve & stem guide	**8**	〃
Valve rocker	**8**	〃
Oil pump	**9**	20~22
Oil distributor	**10**	22~24
Oil delivery pipe	**10**	〃
Oil cleaner	**11**	24~26
Water pump	**12**	26~27
Thermostat	**12**	〃
Radiator & fan	**13**	28~29
Ignition coil & cord	**14**	30~31
Battery & earth band	**14**	〃
Manifold	**15**	32~33
Heat dumper	**15**	〃
Exhaust pipe	**16**	34~35
Muffler	**16**	34~35
Air cleaner	**17**	35~36
Fuel pump (Kyosan)	**18**	37~41
Fuel pump (Aisan)	**18**	〃
Fuel pump (Nikki)	**18**	〃
Carburetor	**19**	41~44
Gasoline tank	**20**	44~46
Accel link	**21**	46~48
Generator	**22**	48~50
Voltage regulator	**23**	50~52
Starter motor	**24**	52~54
Magnet switch	**25**	54~56
Distributor	**26**	56~58
Vacuum controller	**27**	58
CHASSIS GROUP		
Clutch	**28**	59
Clutch & fork	**29**	60~62
Clutch & brake pedal	**30**	62~64
Release cylinder	**30**	〃
Master cylinder (Clutch)	**31**	64~65
Master cylinder (Brake)	**31**	〃
Transmission	**32**	66~67
Transmission case & cover	**33**	67~69
Gear shift lever & shift fork	**33**	〃
Transmission gear	**34**	69~71

Summary	Figure-number	Page
Transfer	35	72~73
Transfer case & cover	36	73~75
Transfer gear & shift lever	37	75~77
Speedometer gear	37	〃
Center brake	38	77~79
Propeller shaft	39	79~80
Universal joint	39	〃
Rear axle	40	81
Rear axle housing	41	82~84
Stabilizer	41	〃
Differential	42	84~86
Rear axle shaft	43	86~87
Drum & disc wheel	43	〃
Front axle	44	88
Front axle housing	45	89~91
Stabilizer	45	〃
Differential	42	91~92
Tie-rod & tie-rod end	46	92~94
Drag link & relay rod	46	〃
Center arm	46	〃
Front axle shaft & bearing	47	95~97
Front axle hub & knuckle	47	〃
Drum & disc wheel	47	〃
Steering	48	98
Steering gear box	49	99~102
Steering wheel	49	〃
Steering bracket	49	〃

Summary	Figure-number	Page
Front flange plate & brake shoe	50	102~103
Rear flange plate & brake shoe	50	〃
Front wheel cylinder	51	104~105
Rear wheel cylinder	51	〃
Oil brake pipe & clamp	52	105~107
Front spring	53	108~109
Front shock. absorber	53	〃
Rear spring	54	110~111
Rear shock absorber	54	〃
Frame	55	112~113
Bumper	55	〃
Battery bracket	55	〃
Pintle hook	56	114

SHEET METAL GROUP

Bonnet cover & hinge	57	116~118
Radiator cover	57	〃
Fender & apron	57	〃
Cowl	57	〃
Step	57	〃
Mark	57	〃

INSTRUMENT GROUP

Instrument panel & pocket	58	118~120
Meter	58	〃
Switch	58	〃

Summary	Figure-number	Page
ELECTRICAL GROUP		
Fuse box	59	121～122
Junction block	59	〃
Wire harness	59	〃
Clamp & lead gum	59	〃
Head light	60	122～124
Flasher lamp	60	〃
Tail & stop lamp	61	124～126
Parking lamp	61	〃
Stop lamp	61	〃
Dimmer switch	62	127
Stop switch	62	〃
Trailer socket	62	〃
Inspection lamp	62	〃
Horn	63	128～130
Horn relay	63	〃

Summary	Figure-number	Page
BODY GROUP		
Ventilator	64	130～132
Front window	65	132～134
Window wiper	65	〃
Winker	65	〃
Floor	65	〃
Curtain	65	〃
Back mirror	65	〃
Seat	66	135～136
TOOL GROUP		
Standard tool	67	138～139
Standard tool	68	〃
Special service tool	69	140～143
Special service tool	70	〃
Special service tool	71	〃

ENGINE GROUP

ELECTRICAL PARTS ATTACHED

FIG.—3 SECTION OF MODEL B ENGINE

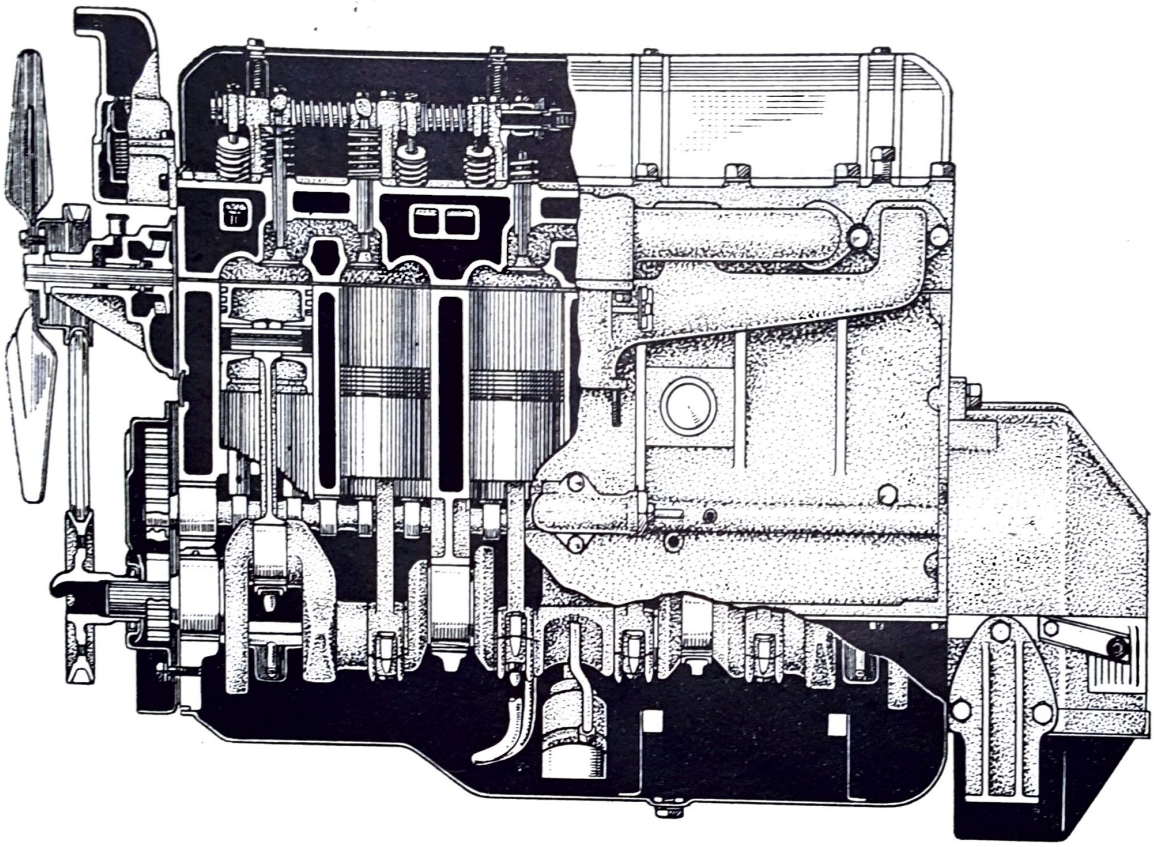

SPECIFICATIONS OF ENGINE MODEL B

Model	Water cooled, forced circulation 6 cylinder, valve-in-head
Bore × Stroke	84.1mm × 101.6mm
Piston displacement	3,386 cc
Compression ratio	6.4
Max. horsepower	85 HP at 3,200 rpm
Max. torque	22 kg–m at 1,600 rpm
Fuel consumption	240 g/HP/h
Combustion chamber	Special type

FIG.—4 SECTION OF MODEL B ENGINE

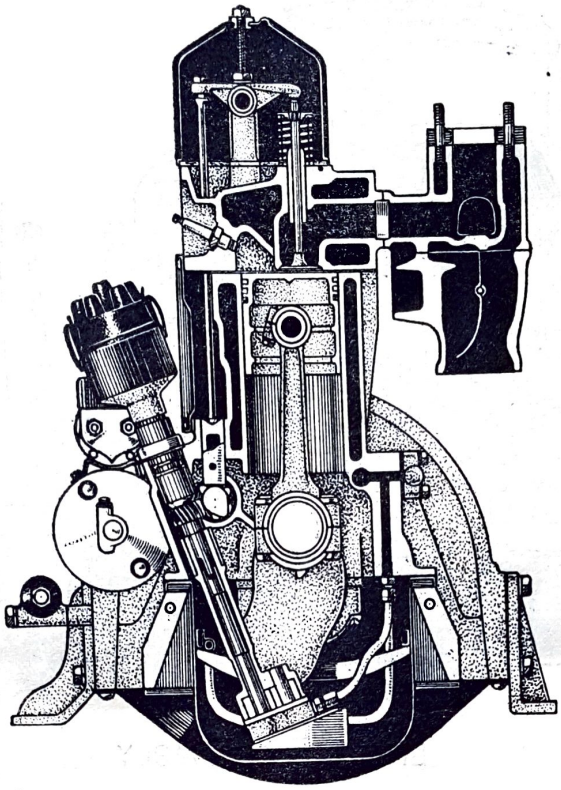

Dimension (length × width × height)	1,046 mm × 690 mm × 812 mm
Engine weight	282 kg
Firing order	1-5-3-6-2-4
Starting system	Starter switch type
Distributor	Automatic control by governor and vacuum
Carburetor	Down-draft type
Air cleaner	Paper filter type
Fuel pump	Diaphragm type
Oil pump	Gear driven, paper filter
Generator	6 V 240 W, shunt wound with voltage regulator
Starter	6 V 0.8 I-P
Battery	6 V 120 Ah

FIG.—5 ENGINE WITH MISSION & CENTER BRAKE

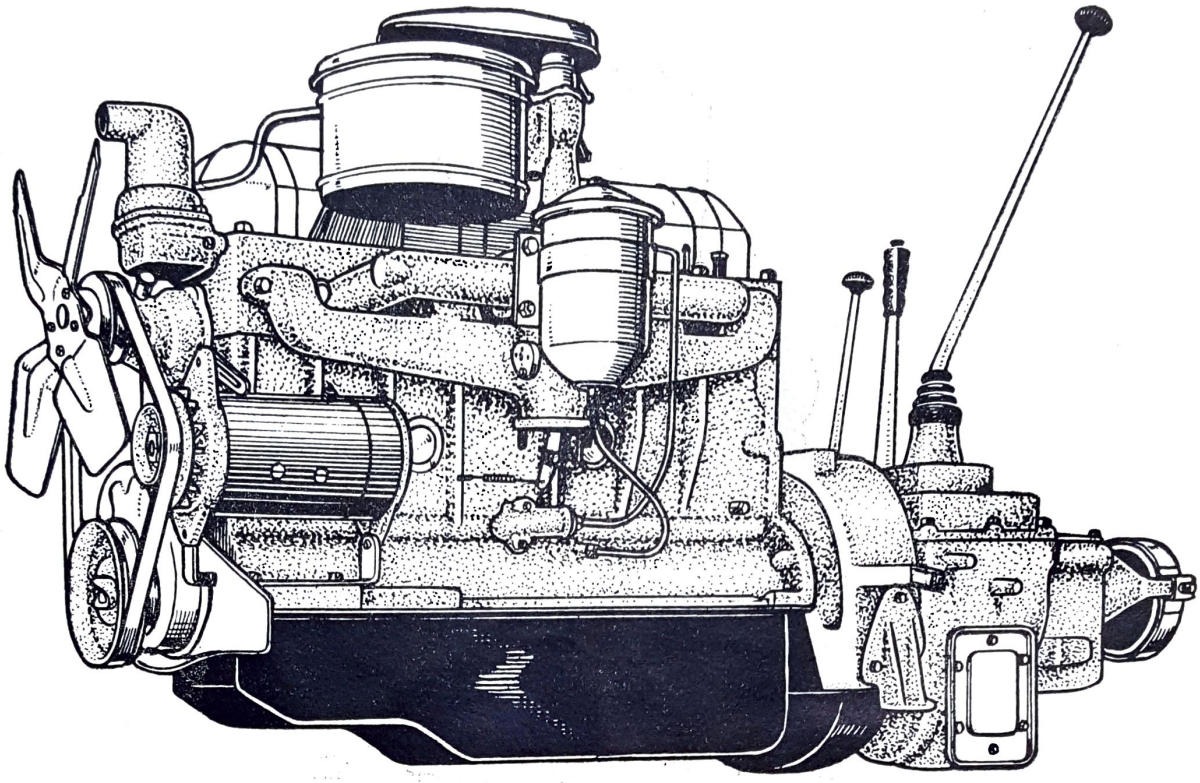

ENGINE ASSEMBLY

BJ20 11000	**Engine assembly (Less clutch, mission, center brake)** (includes all of Fig.—7~9, 11, 12, 15, 18, 19, 22, 24~27 and KEY—A~D, G~W, AC~AL of Fig.—6 and KEY—A~U, X~AG of Fig.—10 and KEY—G, M~P of Fig.—13 and KEY—A~L, T, W~AD of Fig.—14 and KEY—A of Fig.—16 and KEY—E, N~Q of Fig.—20 and KEY—A~E, T~AB of Fig.—21)	1	BJ25. BJ25L
BJ20 13000	**Engine with mission & center brake assembly (with transfer)** (includes all of Fig.—7~9, 11, 12, 15, 18, 19, 22, 24~27, 29, 34, 38, and KEY—A~D, G~W, AC~AL of Fig.—6 and KEY—A~U, X~AG of Fig.—10 and KEY—G, M~P of Fig.—13 and KEY—A~L, T, W~AD of Fig.—14 and KEY—A of Fig.—16 and KEY—E, N~Q of Fig.—20 and KEY—A~E, T~AB of Fig.—21 and KEY—W~Y, AB, AC, AE~AK of Fig.—30 and KEY—A~N, P~AM of Fig.—33 and KEY—A~R, T~AO of Fig.—36 and KEY—A~R, V~AQ of Fig.—37)	1	BJ25
BJ25L13000	**Engine with mission & center brake assembly (with transfer)** (includes all of Fig.—7~9, 11, 12, 15, 18, 19, 22, 24~27, 29, 34, 38 and KEY—A~D, G~W, AC~AL of Fig.—6 and KEY—A~U, X~AG of Fig.—10 and KEY—G, M~P of Fig.—13 and KEY—A~L, T, W~AD of Fig.—14 and KEY—A of Fig.—16 and KEY—E, N~Q of Fig.—20 and KEY—A~E, T~AA, AH of Fig.—21 and KEY—W~Y, AB, AC, AE~AK of Fig.—30 and KEY—A~N, P~AM of Fig.—33 and KEY—A~R, T~AO of Fig.—36 and KEY—A~R, V~AQ of Fig.—37)	1	BJ25L
BJ20 14000	**Engine with clutch assembly** (includes all of Fig.—7~9, 11, 12, 15, 18, 19, 22, 24~27, 29 and KEY—A~D, G~W, AC~AL of Fig.—6 and KEY—A~U, X~AG of Fig.—10 and KEY—G, M~P of Fig.—13 and KEY—A~L, T, W~AD of Fig.—14 and KEY—A of Fig.—16 and KEY—E, N~Q of Fig.—20 and KEY—A~E, T~AB of Fig.—21 and KEY—W~Y, AB, AC, AE~AK of Fig.—30)	1	BJ25. BJ25L

KEY	PART NO.	PART NAME	PER CAR	MODEL

CYLINDER HEAD, CYLINDER BLOCK, VALVE COVER, OIL PAN, TIMING CASE, CLUTCH HOUSING & ENGINE MOUNTING

(FIG. 6)				
A	B 11302	Valve rocker arm cover complete	1	BJ25. BJ25L
B	12104	Cushion gum, valve rocker arm	4	BJ25. BJ25L
C	1288	Socket, water heat indicator	1	BJ25. BJ25L
D	F 12101	Water cock complete	1	BJ25. BJ25L
E	YBK 1030Z	Bolt	6	
F	SWH 10	Washer, spring	6	
G	12113	Bolt, cylinder head set	15	BJ25. BJ25L
H	PWT 4013	Washer, plate	15	
I	F 11371	Gasket, valve rocker arm cover	1	BJ25. BJ25L
	BX 11100	Cylinder head assembly (includes KEY—J of Fig.—6 and KEY—X~AG of Fig.—8 and KEY—T of Fig.—15)	1	BJ25. BJ25L
	BX 11101	Cylinder head complete (includes KEY—J of Fig.—6 and KEY—Y~AG of Fig.—8)	1	BJ25. BJ25L
J	BX 11112	Head, cylinder	1	BJ25. BJ25L
K	B 11212	Gasket, cylinder head	1	BJ25. BJ25L
L	F 12211	Cover, valve lifter	1	BJ25. BJ25L
M	F 12231	Gasket, valve lifter cover	1	BJ25. BJ25L
N	1281	Stopper, cylinder block water	5	BJ25. BJ25L
O	BX 11461	Stopper, oil hole oil	2	BJ25. BJ25L
P	1164	Packing, crank case front end plate	1	BJ25. BJ25L
Q	2BJ 12311	Plate, crank case front end	1	BJ25. BJ25L
	F 12302	Timing gear cover oil retainer complete (includes KEY—R, S of Fig.—6)	1	BJ25. BJ25L
R	1299	Cap, timing gear cover oil retainer	1	BJ25. BJ25L
S	12100	Retainer, timing gear cover oil	1	BJ25. BJ25L
	1019	Timing gear cover complete (includes KEY—R~T of Fig.—6)	1	BJ25. BJ25L
T	1163	Cover, timing gear	1	BJ25. BJ25L
U	1165	Packing, timing gear cover	1	BJ25. BJ25L
V	1298	Nozzle, timing gear oil	1	BJ25. BJ25L
W	1161	Gasket, oil pan front & rear	2	BJ25. BJ25L
X	TBK 1387W	Bolt	4	
Y	KB 4011	Cushion, engine rear support	8	BJ25. BJ25L
Z	CNN 1311	Nut	4	
AA	WP 3020	Pin, cotter	4	
AB	KB 4125	Washer, engine rear support bolt	4	BJ25. BJ25L
	2BJ 12700	Oil pan assembly (with piping) (includes KEY—AC, AE, AF of Fig.—6 and KEY—I~L of Fig.—10)	1	BJ25. BJ25L

FIG.—6 CYLINDER HEAD & BLOCK

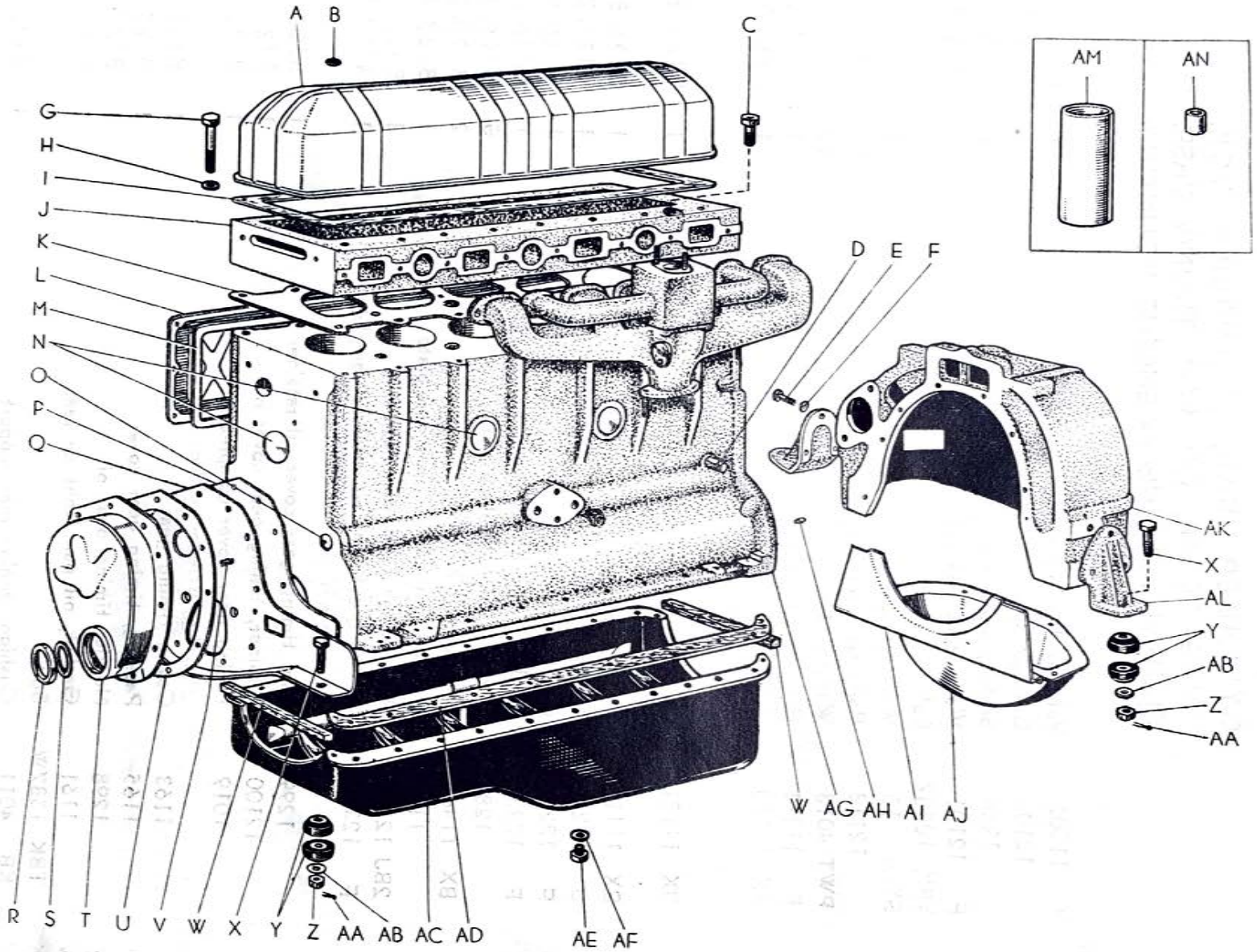

KEY	PART NO.	PART NAME	PER CAR	MODEL
(FIG. 6)				
AC	2BJ 12701	Oil pan assembly (includes KEY—AE, AF of Fig.—6)	1	BJ25. BJ25L
AD	1160	Gasket, oil pan L. H.	1	BJ25. BJ25L
	1159	Gasket, oil pan R. H.	1	BJ25. BJ25L
AE	12103	Screw, oil pan drain	1	BJ25. BJ25L
AF	1238	Washer, oil pan drain screw	1	BJ25. BJ25L
	B 11401	Cylinder block complete (includes KEY—N, O, AG, AH of Fig.—6)	1	BJ25. BJ25L
AG	B 11412	Block, cylinder	1	BJ25. BJ25L
AH	S 11472	Pin, clutch housing knock	2	BJ25. BJ25L
AI	1168	Cover, flywheel side	1	BJ25. BJ25L
AJ	1167	Cover, clutch housing under	1	BJ25. BJ25L
AK	BX 12401	Clutch housing assembly	1	BJ25. BJ25L
AL	2BJ 12612	Arm, engine rear support L. H.	1	BJ25. BJ25L
	2BJ 12611	Arm, engine rear support R. H.	1	BJ25. BJ25L
AM	1169-160	Sleeve, cylinder O. S. 0.160″	6	BJ25. BJ25L
	1169-180	Sleeve, cylinder O. S. 0.180″	6	BJ25. BJ25L
	1169-200	Sleeve, cylinder O. S. 0.200″	6	BJ25. BJ25L
AN	BX 11551	Sleeve, valve lifter	12	BJ25. BJ25L

CRANKSHAFT, FLYWHEEL, PISTON & CONNECTING ROD

(FIG. 7)				
	13001	Piston ring complete S. T. D. (includes KEY—A~C of Fig.—7)	1	BJ25. BJ25L
	13001-5	Piston ring complete O. S. 0.005″	1	BJ25. BJ25L
	13001-10	Piston ring complete O. S. 0.010″	1	BJ25. BJ25L
	13001-20	Piston ring complete O. S. 0.020″	1	BJ25. BJ25L
	13001-30	Piston ring complete O. S. 0.030″	1	BJ25. BJ25L
	13001-40	Piston ring complete O. S. 0.040″	1	BJ25. BJ25L
	13001-50	Piston ring complete O. S. 0.050″	1	BJ25. BJ25L
	13001-60	Piston ring complete O. S. 0.060″	1	BJ25. BJ25L
A	1313	Ring, top pressure S. T. D.	6	BJ25. BJ25L
	1313-5	Ring, top pressure O. S. 0.005″	6	BJ25. BJ25L
	1313-10	Ring, top pressure O. S. 0.010″	6	BJ25. BJ25L
	1313-20	Ring, top pressure O. S. 0.020″	6	BJ25. BJ25L
	1313-30	Ring, top pressure O. S. 0.030″	6	BJ25. BJ25L
	1313-40	Ring, top pressure O. S. 0.040″	6	BJ25. BJ25L
	1313-50	Ring, top pressure O. S. 0.050″	6	BJ25. BJ25L
	1313-60	Ring, top pressure O. S. 0.060″	6	BJ25. BJ25L
B	1314	Ring, second pressure S. T. D.	6	BJ25. BJ25L
	1314-5	Ring, second pressure O. S. 0.005″	6	BJ25. BJ25L
	1314-10	Ring, second pressure O. S. 0.010″	6	BJ25. BJ25L

FIG.—7 CRANKSHAFT & CONNECTING ROD

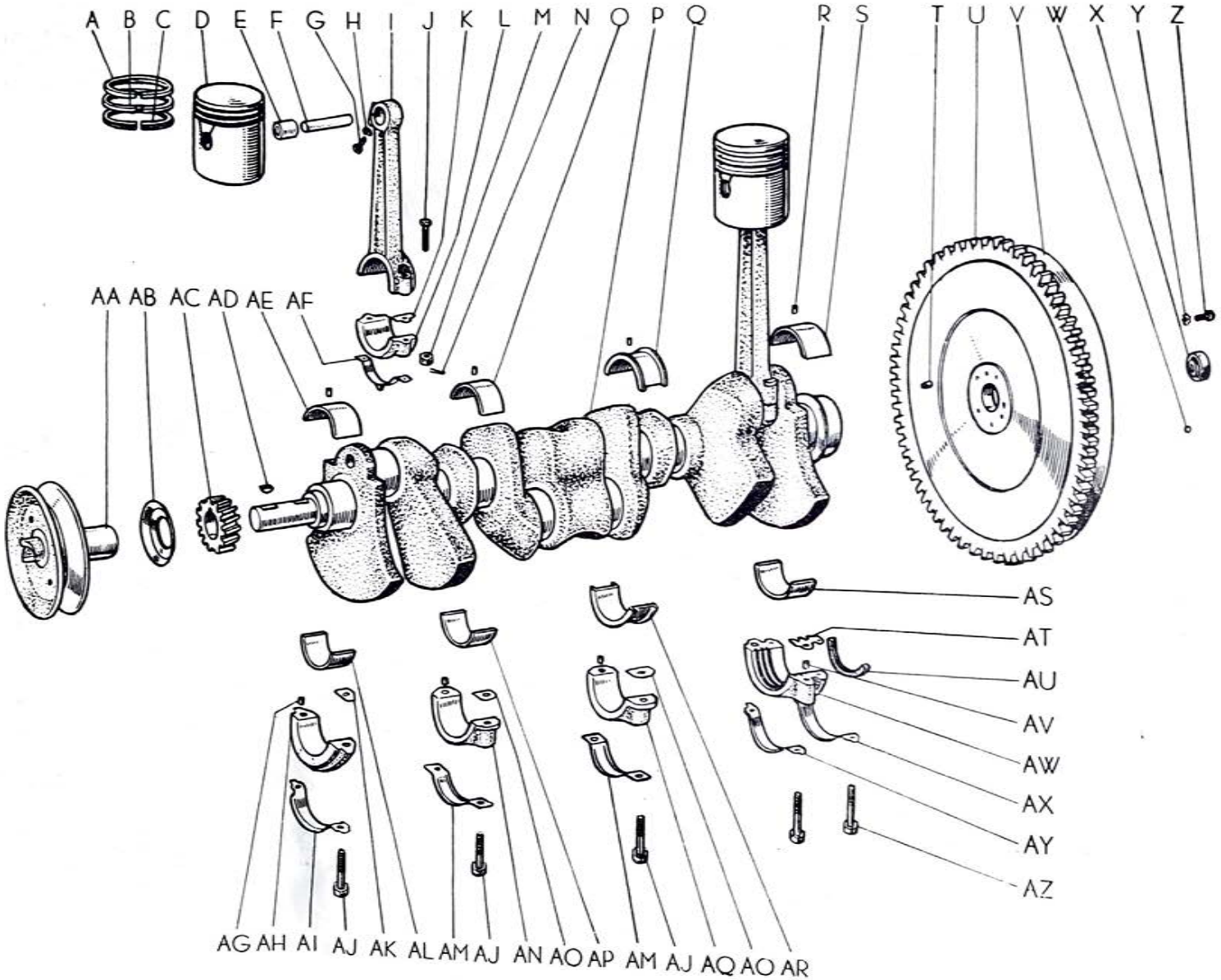

KEY	PART NO.	PART NAME	PER CAR	MODEL
(FIG. 7)				
	1314-20	Ring, second pressure O. S. 0.020″	6	BJ25. BJ25L
	1314-30	Ring, second pressure O. S. 0.030″	6	BJ25. BJ25L
	1314-40	Ring, second pressure O. S. 0.040″	6	BJ25. BJ25L
	1314-50	Ring, second pressure O. S. 0.050″	6	BJ25. BJ25L
	1314-60	Ring, second pressure O. S. 0.060″	6	BJ25. BJ25L
C	1305	Ring, oil S. T. D.	6	BJ25. BJ25L
	1305-5	Ring, oil O. S. 0.005″	6	BJ25. BJ25L
	1305-10	Ring, oil O. S. 0.010″	6	BJ25. BJ25L
	1305-20	Ring, oil O. S. 0.020″	6	BJ25. BJ25L
	1305-30	Ring, oil O. S. 0.030″	6	BJ25. BJ25L
	1305-40	Ring, oil O. S. 0.040″	6	BJ25. BJ25L
	1305-50	Ring, oil O. S. 0.050″	6	BJ25. BJ25L
	1305-60	Ring, oil O. S. 0.060″	6	BJ25. BJ25L
	B 13301	Piston & pin complete S. T. D. (includes KEY—D~F of Fig.—7)	6	BJ25. BJ25L
	B 13301-5	Piston & pin complete O. S. 0.005″	6	BJ25. BJ25L
	B 13301-10	Piston & pin complete O. S. 0.010″	6	BJ25. BJ25L
	B 13301-20	Piston & pin complete O. S. 0.020″	6	BJ25. BJ25L
	B 13301-30	Piston & pin complete O. S. 0.030″	6	BJ25. BJ25L
	B 13301-40	Piston & pin complete O. S. 0.040″	6	BJ25. BJ25L
	B 13301-50	Piston & pin complete O. S. 0.050″	6	BJ25. BJ25L
	B 13301-60	Piston & pin complete O. S. 0.060″	6	BJ25. BJ25L
D	1301	Piston S. T. D.	6	BJ25. BJ25L
	1301-5	Piston O. S. 0.005″	6	BJ25. BJ25L
	1301-10	Piston O. S. 0.010″	6	BJ25. BJ25L
	1301-20	Piston O. S. 0.020″	6	BJ25. BJ25L
	1301-30	Piston O. S. 0.030″	6	BJ25. BJ25L
	1301-40	Piston O. S. 0.040″	6	BJ25. BJ25L
	1301-50	Piston O. S. 0.050″	6	BJ25. BJ25L
	1301-60	Piston O. S. 0.060″	6	BJ25. BJ25L
E	1303	Bush, piston pin	12	BJ25. BJ25L
F	1302	Pin, piston	6	BJ25. BJ25L
G	F 13691	Bolt, piston pin	6	BJ25. BJ25L
H	SWH 10	Washer, spring	6	
	1032	Connecting rod complete (includes KEY—G~N, AF of Fig.—7)	6	BJ25. BJ25L
	1032-20	Connecting rod complete U. S. 0.020″	6	BJ25. BJ25L
I	1321	Rod, connecting	6	BJ25. BJ25L
	1321-20	Rod, connecting U. S. 0.020″	6	BJ25. BJ25L
J	1324	Bolt, connecting rod	12	BJ25. BJ25L
K	BX 13771	Shim, connecting rod	12	BJ25. BJ25L
L	1322	Cap, connecting rod	6	BJ25. BJ25L
	1322-20	Cap, connecting rod U. S. 0.020″	6	BJ25. BJ25L
M	1325	Nut, connecting rod	12	BJ25. BJ25L

KEY	PART NO.	PART NAME	PER CAR	MODEL
(FIG. 7)				
N	WP 2020	Pin, cotter	12	
	B 11710	Crankshaft bearing metal assembly S. T. D. (includes KEY—O, Q, S, AE, AL, AP, AR, AS of Fig.—7)	1	BJ25. BJ25L
	B 11710-10	Crankshaft bearing metal assembly U. S. 0.010″	1	BJ25. BJ25L
	B 11710-20	Crankshaft bearing metal assembly U. S. 0.020″	1	BJ25. BJ25L
	B 11710-30	Crankshaft bearing metal assembly U. S. 0.030″	1	BJ25. BJ25L
	B 11710-40	Crankshaft bearing metal assembly U. S. 0.040″	1	BJ25. BJ25L
O	1141	Metal, crankshaft second bearing upper S. T. D.	1	BJ25. BJ25L
	1141-10	Metal, crankshaft second bearing upper U. S. 0.010″	1	BJ25. BJ25L
	1141-20	Metal, crankshaft second bearing upper U. S. 0.020″	1	BJ25. BJ25L
	1141-30	Metal, crankshaft second bearing upper U. S. 0.030″	1	BJ25. BJ25L
	1141-40	Metal, crankshaft second bearing upper U. S. 0.040″	1	BJ25. BJ25L
	1042	Crankshaft complete (includes KEY—P, T of Fig.—7)	1	BJ25. BJ25L
P	14111	Crankshaft (casting)	1	BJ25. BJ25L
	B 14112	Crankshaft (forging)	1	BJ25. BJ25L
Q	1143	Metal, crankshaft third bearing upper S. T. D.	1	BJ25. BJ25L
	1143-10	Metal, crankshaft third bearing upper U. S. 0.010″	1	BJ25. BJ25L
	1143-20	Metal, crankshaft third bearing upper U. S. 0.020″	1	BJ25. BJ25L
	1143-30	Metal, crankshaft third bearing upper U. S. 0.030″	1	BJ25. BJ25L
	1143-40	Metal, crankshaft third bearing upper U. S. 0.040″	1	BJ25. BJ25L
R	1179	Pin, crankshaft main bearing metal knock	4	BJ25. BJ25L
S	1145	Metal, crankshaft rear bearing upper S. T. D.	1	BJ25. BJ25L
	1145-10	Metal, crankshaft rear bearing upper U. S. 0.010″	1	BJ25. BJ25L
	1145-20	Metal, crankshaft rear bearing upper U. S. 0.020″	1	BJ25. BJ25L
	1145-30	Metal, crankshaft rear bearing upper U. S .0.030″	1	BJ25. BJ25L
	1145-40	Metal, crankshaft rear bearing upper U .S. 0.040″	1	BJ25. BJ25L
T	14141	Pin, flywheel knock	1	BJ25. BJ25L
	1041	Flywheel complete (includes KEY—U~W of Fig.—7)	1	BJ25. BJ25L
U	1441	Gear, flywheel ring	1	BJ25. BJ25L
V	14161	Flywheel	1	BJ25. BJ25L
W	1436	Ball, flywheel	1	BJ25. BJ25L
X	1417	Bearing, main drive gear front	1	BJ25. BJ25L
Y	1435	Washer, flywheel bolt	6	BJ25. BJ25L
Z	14142	Bolt, flywheel	6	BJ25. BJ25L
AA	1442	Pulley, crank handle	1	BJ25. BJ25L
AB	1423	Deflector, crankshaft oil	1	BJ25. BJ25L
AC	1422	Gear, crankshaft	1	BJ25. BJ25L
AD	1424	Key, crankshaft & camshaft	2	BJ25. BJ25L
AE	1139	Metal, crankshaft front bearing upper S. T. D.	1	BJ25. BJ25L
	1139-10	Metal, crankshaft front bearing upper U. S. 0.010″	1	BJ25. BJ25L
	1139-20	Metal, crankshaft front bearing upper U. S. 0.020″	1	BJ25. BJ25L
	1139-30	Metal, crankshaft front bearing upper U. S. 0.030″	1	BJ25. BJ25L

KEY	PART NO.	RART NAME	PER CAR	MODEL
(FIG. 7)				
	1139-40	Metal, crankshaft front bearing upper U. S. 0.040″	1	BJ25. BJ25L
AF	1311	Oil dipper complete	6	BJ25. BJ25L
AG	BX 11775	Knock, crankshaft main bearing cap	6	BJ25. BJ25L
AH	1135	Cap, crankshaft front bearing	1	BJ25. BJ25L
AI	1292	Lock, crankshaft front bearing cap bolt	1	BJ25. BJ25L
AJ	YBT 1458T	Bolt	6	
AK	BX 11795	Shim, crankshaft front bearing	2	BJ25. BJ25L
	BX 11795-5	Shim, crankshaft front bearing t=0.05 } maintenance spare part		BJ25. BJ25L
	BX 11795-10	Shim, crankshaft front bearing t=0.1 } maintenance spare part		BJ25. BJ25L
AL	1140	Metal, crankshaft front bearing lower S. T. D.	1	BJ25. BJ25L
	1140-10	Metal, crankshaft front bearing lower U. S. 0.010″	1	BJ25. BJ25L
	1140-20	Metal, crankshaft front bearing lower U .S. 0.020″	1	BJ25. BJ25L
	1140-30	Metal, crankshaft front bearing lower U .S. 0.030″	1	BJ25. BJ25L
	1140-40	Metal, crankshaft front bearing lower U. S. 0.040″	1	BJ25. BJ25L
AM	1293	Lock, crankshaft second & third bearing cap bolt	2	BJ25. BJ25L
AN	1136	Cap, crankshaft second bearing	1	BJ25. BJ25L
AO	BX 11796	Shim, crankshaft second & third bearing	4	BJ25. BJ25L
	BX 11796-5	Shim, crankshaft second & third bearing t=0.05 } maintenance spare part		BJ25. BJ25L
	BX 11796-10	Shim, crankshaft second & third bearing t=0.1 } maintenance spare part		BJ25. BJ25L
AP	1142	Metal, crankshaft second bearing lower S. T. D.	1	BJ25. BJ25L
	1142-10	Metal, crankshaft second bearing lower U. S. 0.010″	1	BJ25. BJ25L
	1142-20	Metal, crankshaft second bearing lower U. S. 0.020″	1	BJ25. BJ25L
	1142-30	Metal, crankshaft second bearing lower U. S. 0.030″	1	BJ25. BJ25L
	1142-40	Metal, crankshaft second bearing lower U. S. 0.040″	1	BJ25. BJ25L
AQ	1137	Cap, crankshaft third bearing	1	BJ25. BJ25L
AR	1144	Metal, crankshaft third bearing lower S. T. D.	1	BJ25. BJ25L
	1144-10	Metal, crankshaft third bearing lower U. S. 0.010″	1	BJ25. BJ25L
	1144-20	Metal, crankshaft third bearing lower U. S. 0.020″	1	BJ25. BJ25L
	1144-30	Metal, crankshaft third bearing lower U. S. 0.030″	1	BJ25. BJ25L
	1144-40	Metal, crankshaft third bearing lower U. S. 0.040″	1	BJ25. BJ25L
AS	11718	Metal, crankshaft rear bearing lower S. T. D.	1	BJ25. BJ25L
	11718-10	Metal, crankshaft rear bearing lower U. S. 0.010″	1	BJ25. BJ25L
	11718-20	Metal, crankshaft rear bearing lower U. S. 0.020″	1	BJ25. BJ25L
	11718-30	Metal, crankshaft rear bearing lower U. S. 0.030″	1	BJ25. BJ25L
	11718-40	Metal, crankshaft rear bearing lower U. S. 0.040″	1	BJ25. BJ25L
AT	BX 11797	Shim, crankshaft rear bearing	2	BJ25. BJ25L
	BX 11797-5	Shim, crankshaft rear bearing t=0.05 } maintenance spare part		BJ25. BJ25L
	BX 11797-10	Shim, crankshaft rear bearing t=0.1 } maintenance spare part		BJ25. BJ25L
AU	BX 11773	Stopper, crankshaft rear oil	2	BJ25. BJ25L
AV	BX 11776	Knock, crankshaft rear bearing cap	2	BJ25. BJ25L
AW	11754	Cap, crankshaft rear bearing	1	BJ25. BJ25L
AX	11794	Lock, crankshaft rear bearing cap rear bolt	1	BJ25. BJ25L
AY	11793	Lock, crankshaft rear bearing cap front bolt	1	BJ25. BJ25L
AZ	11791	Bolt, crankshaft rear bearing cap	4	BJ25. BJ25L

FIG.—8 CAMSHAFT & VALVE

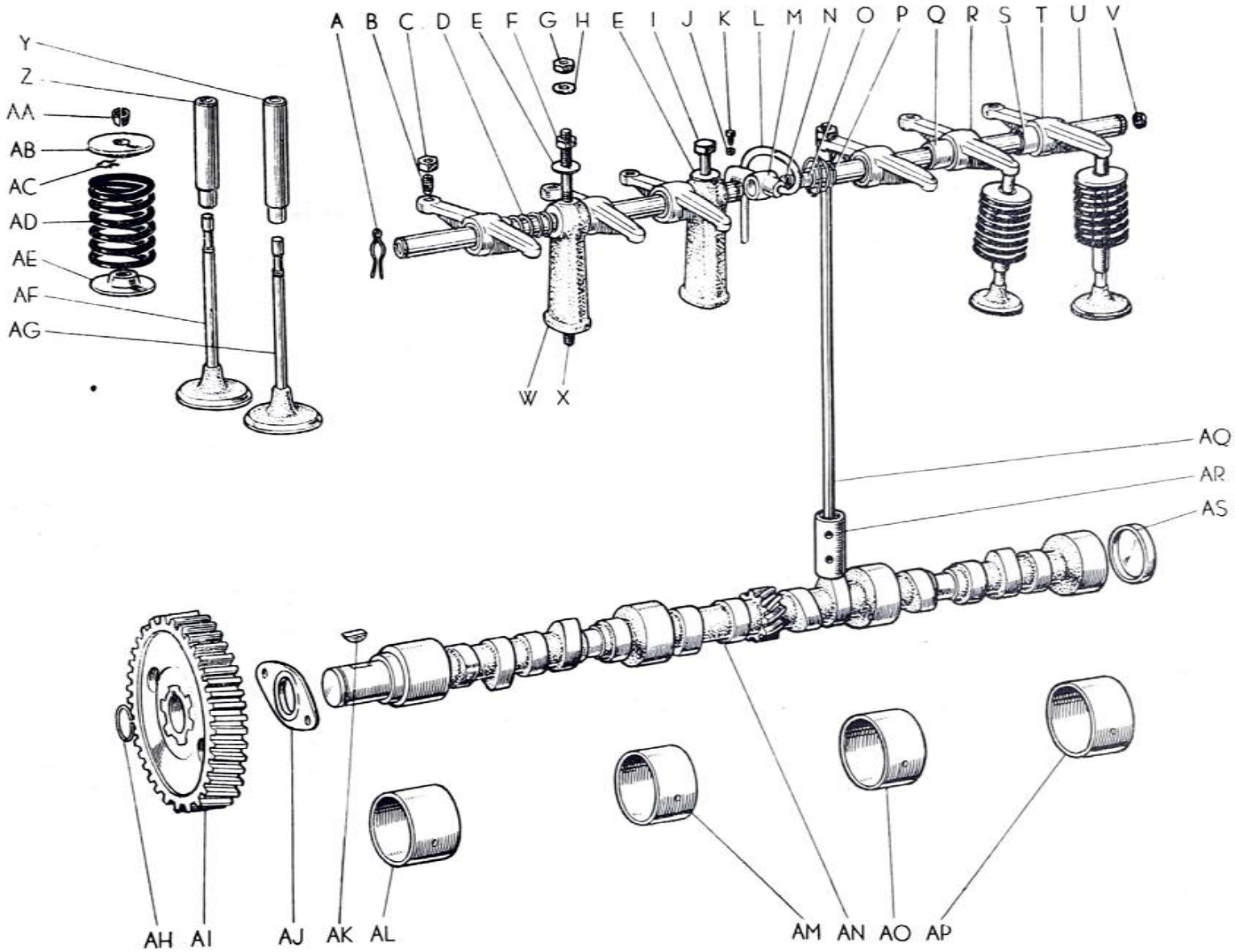

KEY	PART NO.	PART NAME	PER CAR	MODEL

CAMSHAFT, CAMSHAFT GEAR, VALVE & VALVE ROCKER

(FIG. 8)

A	1511	Spring, valve rocker shaft lock	4	BJ25. BJ25L
B	1538	Screw, valve adjusting	12	BJ25. BJ25L
C	1539	Nut, valve adjusting screw lock	12	BJ25. BJ25L
D	1545	Spring, valve rocker shaft	4	BJ25. BJ25L
E	1559	Washer, plate	6	BJ25. BJ25L
F	TNN 1008	Nut	4	
G	TNN 1008Z	Nut	4	
H	1563	Washer, valve rocker arm cover	4	BJ25. BJ25L
I	1556	Bolt, valve rocker shaft support	2	BJ25. BJ25L
J	LNT 0504T	Nut	1	
K	F 15333	Screw, valve rocker shaft oil adjusting	1	BJ25. BJ25L
L	1750	Pipe, cylinder head oil	1	BJ25. BJ25L
	F 1055	Valve rocker shaft oil delivery union complete (includes KEY—J, K, M of Fig—8)	1	BJ25. BJ25L
M	F 15312	Union, valve rocker shaft oil delivery	1	BJ25. BJ25L
N	1544	Spring, valve rocker shaft oil connect sleeve	1	BJ25. BJ25L
O	1543	Sleeve, valve rocker shaft oil connect	1	BJ25. BJ25L
P	1509	Spring, valve rocker shaft tension	4	BJ25. BJ25L
Q	1537	Bush, exhaust valve rocker arm	6	BJ25. BJ25L
R	1053	Exhaust valve rocker arm complete (includes KEY—Q of Fig—8)	6	BJ25. BJ25L
S	1536	Bush, intake valve rocker arm	6	BJ25. BJ25L
T	1051	Intake valve rocker arm complete R. H. (includes KEY—S of Fig.—8)	3	BJ25. BJ25L
	1052	Intake valve rocker arm complete L. H.	3	BJ25. BJ25L
	B 14010	Valve rocker shaft assembly R. H. (includes KEY—A~D, P~W of Fig.—8)	1	BJ25. BJ25L
	B 14020	Valve rocker shaft assembly L. H.	1	BJ25. BJ25L
	1054	Valve rocker shaft complete (includes KEY—U, V of Fig.—8)	2	BJ25. BJ25L
U	1540	Shaft, valve rocker	2	BJ25. BJ25L
V	1541	Stopper, valve rocker shaft oil	2	BJ25. BJ25L
W	1546	Support, valve rocker shaft	6	BJ25. BJ25L
X	1557	Bolt, valve rocker shaft support stud	4	BJ25. BJ25L
Y	1547	Guide, intake valve stem	6	BJ25. BJ25L
Z	1548	Guide, exhaust valve stem	6	BJ25. BJ25L
AA	1552	Stopper, valve spring cap	24	BJ25. BJ25L
AB	F 14551	Cap, valve spring	12	BJ25. BJ25L
AC	1562	Spring, valve stop retaining	12	BJ25. BJ25L
AD	F 14531	Spring, valve	12	BJ25. BJ25L
AE	F 14552	Seat, valve spring	12	BJ25. BJ25L

KEY	PART NO.	PART NAME	PER CAR	MODEL
(FIG. 8)				
AF	BX 14521	Valve, exhaust	6	BJ25. BJ25L
AG	BX 14511	Valve, intake	6	BJ25. BJ25L
AH	1528	Ring, camshaft snap	1	BJ25. BJ25L
AI	1532	Gear, camshaft	1	BJ25. BJ25L
AJ	1555	Plate, camshaft thrust	1	BJ25. BJ25L
AK	1424	Key, crankshaft & camshaft	1	BJ25. BJ25L
	F 11810	Camshaft bearing metal assembly S. T. D. (includes KEY—AL, AM, AO, AP of Fig.—8)	1	BJ25. BJ25L
	F 11810-10	Camshaft bearing metal assembly U. S. 0.010″	1	BJ25. BJ25L
	F 11810-20	Camshaft bearing metal assembly U. S. 0.020″	1	BJ25. BJ25L
	F 11810-30	Camshaft bearing metal assembly U. S. 0.030″	1	BJ25. BJ25L
	F 11810-40	Camshaft bearing metal assembly U. S. 0.040″	1	BJ25. BJ25L
AL	1147	Metal, camshaft front bearing S. T. D.	1	BJ25. BJ25L
	1147-10	Metal, camshaft front bearing U. S. 0.010″	1	BJ25. BJ25L
	1147-20	Metal, camshaft front bearing U. S. 0.020″	1	BJ25. BJ25L
	1147-30	Metal, camshaft front bearing U. S. 0.030″	1	BJ25. BJ25L
	1147-40	Metal, camshaft front bearing U. S. 0.040″	1	BJ25. BJ25L
AM	1148	Metal, camshaft second bearing S. T. D.	1	BJ25. BJ25L
	1148-10	Metal, camshaft second bearing U. S. 0.010″	1	BJ25. BJ25L
	1148-20	Metal, camshaft second bearing U. S. 0.020″	1	BJ25. BJ25L
	1148-30	Metal, camshaft second bearing U. S. 0.030″	1	BJ25. BJ25L
	1148-40	Metal, camshaft second bearing U. S. 0.040″	1	BJ25. BJ25L
	BX 14301	Camshaft complete (includes KEY—AH~AK, AN of Fig.—8)	1	BJ25. BJ25L
AN	BX 14311	Camshaft	1	BJ25. BJ25L
AO	1149	Metal, camshaft third bearing S. T. D.	1	BJ25. BJ25L
	1149-10	Metal, camshaft third bearing U. S. 0.010″	1	BJ25. BJ25L
	1149-20	Metal, camshaft third bearing U. S. 0.020″	1	BJ25. BJ25L
	1149-30	Metal, camshaft third bearing U. S. 0.030″	1	BJ25. BJ25L
	1149-40	Metal, camshaft third bearing U. S. 0.040″	1	BJ25. BJ25L
AP	1150	Metal, camshaft rear bearing S. T. D.	1	BJ25. BJ25L
	1150-10	Metal, camshaft rear bearing U. S. 0.010″	1	BJ25. BJ25L
	1150-20	Metal, camshaft rear bearing U. S. 0.020″	1	BJ25. BJ25L
	1150-30	Metal, camshaft rear bearing U. S. 0.030″	1	BJ25. BJ25L
	1150-40	Metal, camshaft rear bearing U. S. 0.040″	1	BJ25. BJ25L
AQ	1554	Rod, push	12	BJ25. BJ25L
AR	1503	Lifter, valve S. T. D.	12	BJ25. BJ25L
	1503-2	Lifter, valve O. S. 0.002″	12	BJ25. BJ25L
AS	1283	Cover, camshaft rear end	1	BJ25. BJ25L

OIL PUMP

(FIG. 9)				
	1062	Oil pump assembly (includes KEY--C~H, K~R of Fig.—9)	1	BJ25. BJ25L
A	YBN 1230	Bolt	2	

KEY	PART NO.	PART NAME	PER CAR	MODEL
(FIG. 9)				
B	1133	Support, oil pump	1	BJ25. BJ25L
C	1673	Ring, oil pump body thrust	1	BJ25. BJ25L
D	1667	Shaft, oil pump	1	BJ25. BJ25L
E	1668	Key, oil pump shaft	1	BJ25. BJ25L
F	1670	Gear, oil pump main	1	BJ25. BJ25L
G	1669	Shaft, oil pump idle	1	BJ25. BJ25L
H	1671	Gear, oil pump idle	1	BJ25. BJ25L
I	SWH 08	Washer, spring	1	
J	TBN 0820T	Bolt	1	

FIG.—9 OIL PUMP

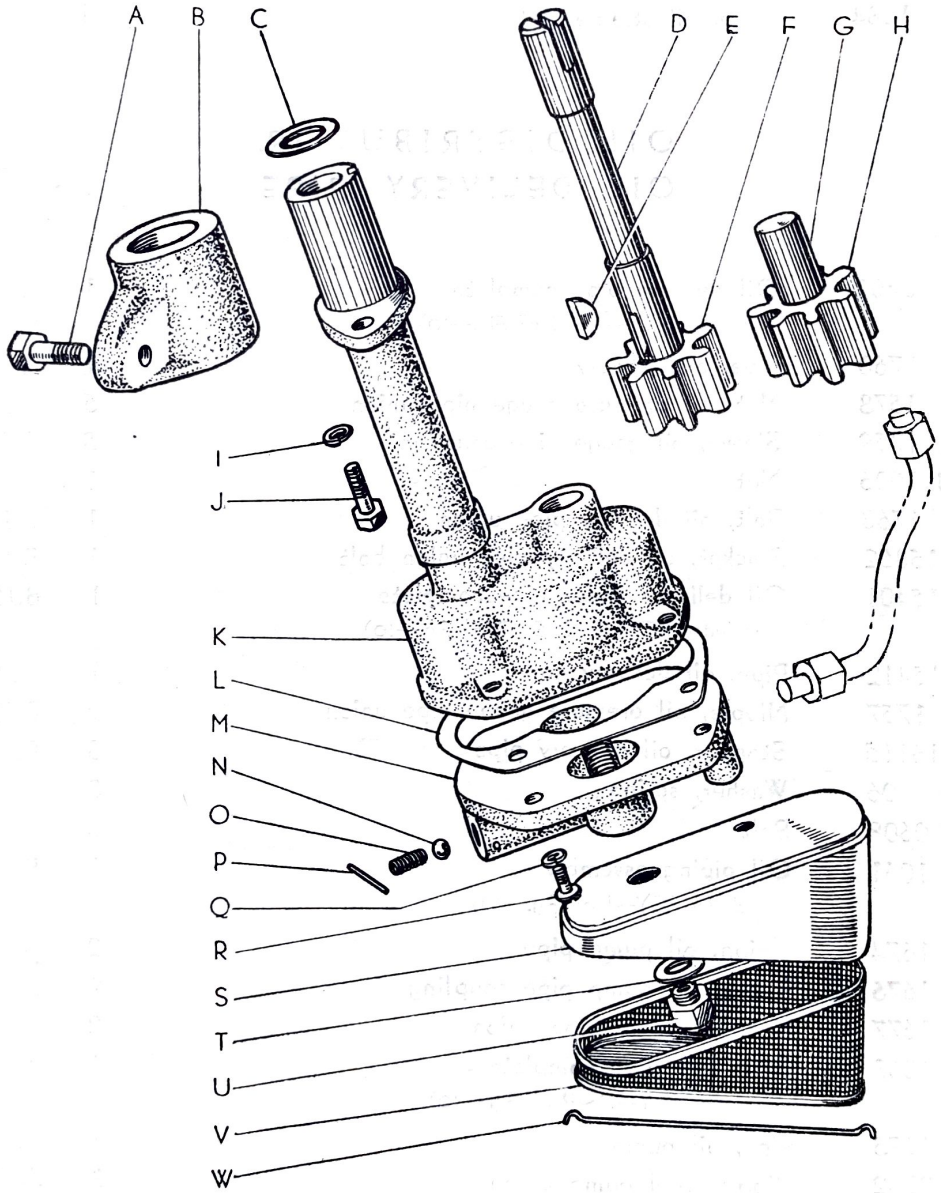

KEY	PART NO.	PART NAME	PER CAR	MODEL
(FIG. 9)				
K	1664	Body, oil pump	1	BJ25. BJ25L
L	1666	Packing, oil pump cover	2	BJ25. BJ25L
M	1665	Cover, oil pump	1	BJ25. BJ25L
N	1678	Ball, oil pump valve	1	BJ25. BJ25L
O	1679	Spring, oil pump valve	1	BJ25. BJ25L
P	1680	Pin, oil pump valve spring set	1	BJ25. BJ25L
Q	SWH 06	Washer, spring	1	
R	MBN 0612	Bolt	1	
S	1682	Shell, oil strainer	1	BJ25. BJ25L
T	16118	Washer, oil suction plug set	1	BJ25. BJ25L
U	1681	Plug, oil suction	1	BJ25. BJ25L
V	1683	Strainer, oil	1	BJ25. BJ25L
W	1684	Wire, oil strainer set	1	BJ25. BJ25L

OIL DISTRIBUTOR, OIL DELIVERY PIPE

(FIG. 10)				
	BX 15402	Oil delivery pipe complete (includes KEY—A~C of Fig.—10)	1	BJ25. BJ25L
A	1760	Pipe, oil delivery	1	BJ25. BJ25L
B	1578	Nut, oil pressure gauge pipe union	5	BJ25. BJ25L
C	1759	Sleeve, oil gauge pipe coupling	5	BJ25. BJ25L
D	LNN 1006	Nut	1	
E	1763	Bolt, oil delivery pipe union	1	BJ25. BJ25L
F	F 15352	Bracket, oil delivery pipe union bolt	1	BJ25. BJ25L
	F 15401	Oil delivery under pipe complete (includes KEY—B, C, E, G of Fig.—10)	1	BJ25. BJ25L
G	F 15412	Pipe, oil delivery under	1	BJ25. BJ25L
H	1757	Nipple, oil pressure gauge pipe union	2	BJ25. BJ25L
I	16115	Stopper, oil delivery pipe	3	BJ25. BJ25L
J	SWH 06	Washer, spring	3	
K	MBN 0608	Bolt	3	
L	1061	Oil piping assembly (includes KEY—I of Fig.—10)	1	BJ25. BJ25L
M	1674	Union, oil pump pipe	2	BJ25. BJ25L
N	1676	Sleeve, oil pump pipe coupling	2	BJ25. BJ25L
O	1677	Nut, oil pump pipe union	2	BJ25. BJ25L
	1063	Oil pump pipe complete (includes KEY—N~P of Fig.—10)	1	BJ25. BJ25L
P	1675	Pipe, oil pump	1	BJ25. BJ25L
Q	2342	Nipple, fuel pump union	3	BJ25. BJ25L
R	2344	Sleeve, fuel & gasoline pipe coupling	4	BJ25. BJ25L

FIG.—10 OIL DISTRIBUTOR & OIL DELIVERY PIPE

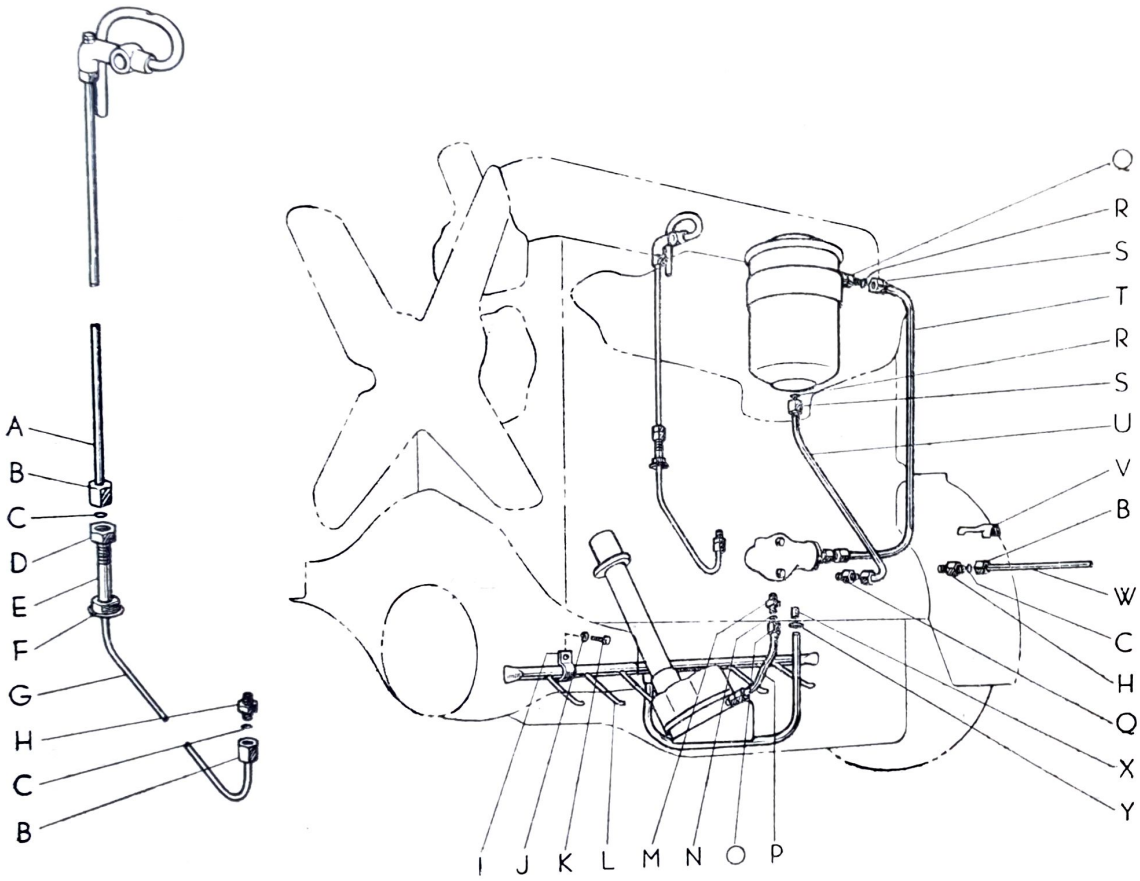

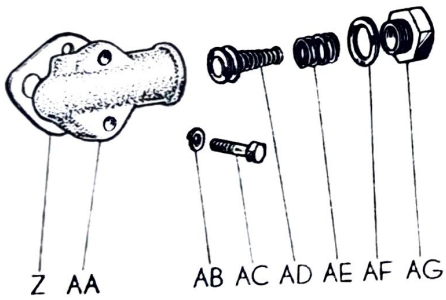

KEY	PART NO.	PART NAME	PER CAR	MODEL
(FIG. 10)				
S	2345	Nut, fuel & gasoline pipe union	4	BJ25. BJ25L
	BQ 15401	Oil cleaner inlet pipe complete (includes KEY—R~T of Fig.—10)	1	BJ25. BJ25L
T	BQ 15413	Pipe, oil cleaner inlet	1	BJ25. BJ25L
	BQ 15402	Oil cleaner outlet pipe complete (includes KEY—R, S, U of Fig.—10)	1	BJ25. BJ25L
U	BQ 15412	Pipe, oil cleaner outlet	1	BJ25. BJ25L
V	F 21112	Cap, oil pressure gauge pipe union	1	BJ25. BJ25L
	BX 21101	Oil pressure gauge pipe complete (includes KEY—B, C, W of Fig.—10)	1	BJ25. BJ25L
W	BX 21111	Pipe, oil pressure gauge	1	BJ25. BJ25L
X	1686	Pipe, oil delivery connect	1	BJ25. BJ25L
Y	12121	Packing, oil delivery main pipe	1	BJ25. BJ25L
Z	1732	Packing, oil distributor body	1	BJ25. BJ25L
	1075	Oil distributor assembly (includes KEY—AA, AD~AG of Fig.—10)	1	BJ25. BJ25L
AA	1731	Body, oil distributor	1	BJ25. BJ25L
AB	SWH 08	Washer, spring	2	
AC	TBN 0840Z	Bolt	2	
AD	1076	Oil distributor valve complete	1	BJ25. BJ25L
AE	1739	Spring, oil distributor valve set	1	BJ25. BJ25L
AF	F 17346	Gasket, oil distributor cap	1	BJ25. BJ25L
AG	1740	Cap, oil distributor	1	BJ25. BJ25L

OIL CLEANER & BRACKET

(FIG. 11)				
	15620	Oil cleaner assembly (includes KEY—F~M, S~V of Fig.—11)	1	BJ25. BJ25L
A	BL 18373	"U" Bolt, oil cleaner	2	BJ25. BJ25L
B	BQ 18381	Bracket, oil cleaner (A)	1	BJ25. BJ25L
C	BQ 18382	Bracket, oil cleaner (B)	1	BJ25. BJ25L
D	SWH 10	Washer, spring	4	
E	TNN 1008Z	Nut	4	
F	TBN 1230	Bolt	1	
G	15646	Packing, oil cleaner cap bolt	1	BJ25. BJ25L
H	15658	Cap, oil cleaner	1	BJ25. BJ25L
I	15644	Packing, oil cleaner body	1	BJ25. BJ25L
J	15665	Support, oil cleaner filter	1	BJ25. BJ25L
K	15697	Washer, oil cleaner filter support	2	BJ25. BJ25L
L	15674	Ring, oil cleaner felt	2	BJ25. BJ25L
M	15606	Oil cleaner filter element complete	1	BJ25. BJ25L
N	BQ 18384	Band, oil cleaner clamp (B)	1	BJ25. BJ25L

FIG.—11 OIL CLEANER

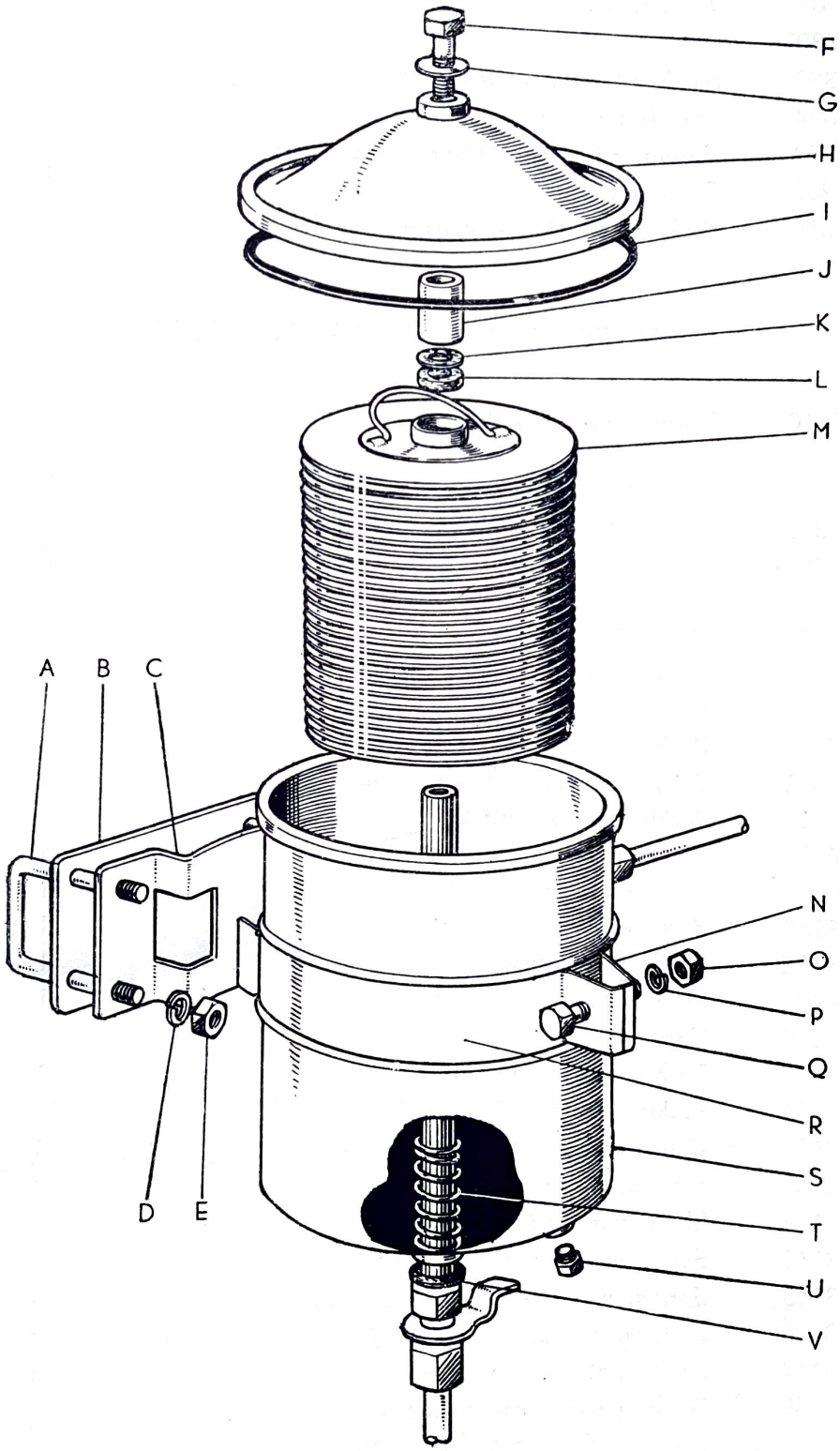

KEY	PART NO.	RART NAME	PER CAR	MODEL
(FIG. 11)				
O	TNN 0806	Nut	1	
P	SWH 08	Washer, spring	1	
Q	TBN 0830T	Bolt	1	
R	BQ 18383	Band, oil cleaner clamp (A)	1	BJ25. BJ25L
S	15604	Oil cleaner case complete	1	BJ25. BJ25L
T	S 15664	Spring, oil cleaner filter gauge support	1	BJ25. BJ25L
U	1961	Cock, drain	1	BJ25. BJ25L
V	R 15616	Packing, oil cleaner cartridge guide	1	BJ25. BJ25L

WATER PUMP & THERMOSTAT

(FIG. 12)				
	FQS16110	Water pump assembly (includes KEY—L~N, Q~AC of Fig.—12)	1	BJ25. BJ25L
A	F 16451	Hose, by-pass	1	BJ25. BJ25L
B	B 16550	By-pass hose clamp complete	2	BJ25. BJ25L
C	TNN 0806Z	Nut	2	
D	SWH 08	Washer, spring	2	
E	2BJ 16411	Case, thermostat	1	BJ25. BJ25L
F	BX 16312	Packing, bellows case	1	BJ25. BJ25L
G	F 16210	Bellows assembly	1	BJ25. BJ25L
H	BX 16413	Packing, thermostat case	1	BJ25. BJ25L
I	BX 16415	Bolt, thermostat case set stud	2	BJ25. BJ25L
J	18101	Packing, water outlet	1	BJ25. BJ25L
K	BX 16411	Water outlet	1	BJ25. BJ25L
L	FQS16181	Seat, water pump pulley	1	BJ25. BJ25L
M	18169	Bush, water pump front	1	BJ25. BJ25L
N	BX 16112	Body, water pump	1	BJ25. BJ25L
O	BX 16452	By-pass inlet, water pump	1	BJ25. BJ25L
P	AGZ 1020	Cup, grease	1	BJ25. BJ25L
Q	18170	Bush, water pump rear	1	BJ25. BJ25L
R	1893	Packing, water pump shaft	1	BJ25. BJ25L
S	18165	Cap, water pump rotor	1	BJ25. BJ25L
T	18167	Washer, water pump thrust	1	BJ25. BJ25L
U	18164	Shaft gum, water pump	1	BJ25. BJ25L
V	18168	Seat, water pump rear spring	1	BJ25. BJ25L
W	18163	Spring, water pump	1	BJ25. BJ25L
X	18166	Cap, water pump shaft gum	1	BJ25. BJ25L
Y	18162	Shaft, water pump rotor	1	BJ25. BJ25L
	BX 16130	Water pump rotor assembly (includes KEY—S~Z of Fig.—12)	1	BJ25. BJ25L
	1082	Water pump rotor complete (includes KEY—Y, Z of Fig.—12)	1	BJ25. BJ25L
Z	18161	Rotor, water pump	1	BJ25. BJ25L

KEY	PART NO.	PART NAME	PER CAR	MODEL
(FIG. 12)				
AA	1887	Packing, water pump	1	BJ25. BJ25L
AB	1886	Plate, water pump seat	1	BJ25. BJ25L
AC	F 16191	Seat, water pump thrust	1	BJ25. BJ25L
AD	1888	Packing, water pump seat	1	BJ25. BJ25L

FIG.—12 WATER PUMP & THERMOSTAT

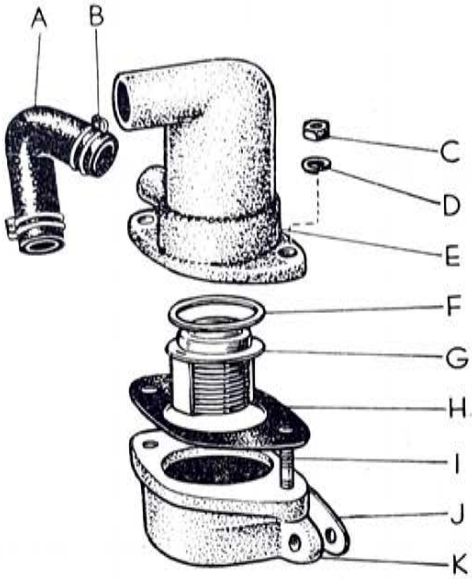

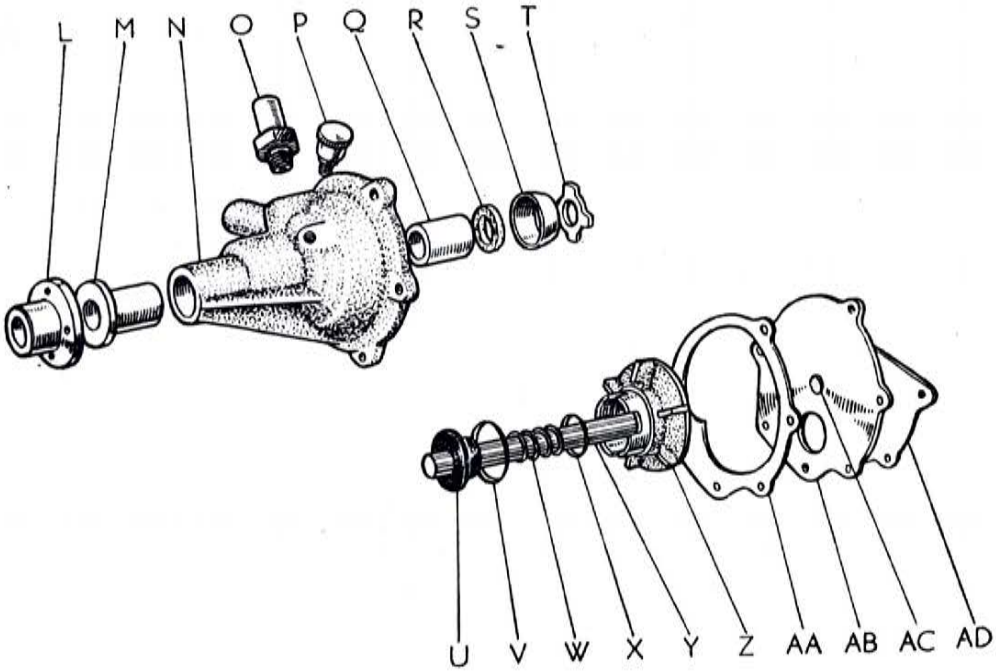

KEY	PART NO.	PART NAME	PER CAR	MODEL

RADIATOR & FAN

(FIG. 13)

A	TBN 0820	Bolt	8	
B	B 16560	Radiator hose clamp assembly	6	BJ25. BJ25L
C	2BJ 22313	Hose, water outlet	1	BJ25. BJ25L
D	BJ 22343	Pipe, water outlet	1	BJ25. BJ25L
E	2BJ 22313	Hose, water outlet (water pump inlet)	1	BJ25. BJ25L
F	PWL 2508	Washer, plate	8	

FIG.—13 RADIATOR & FAN

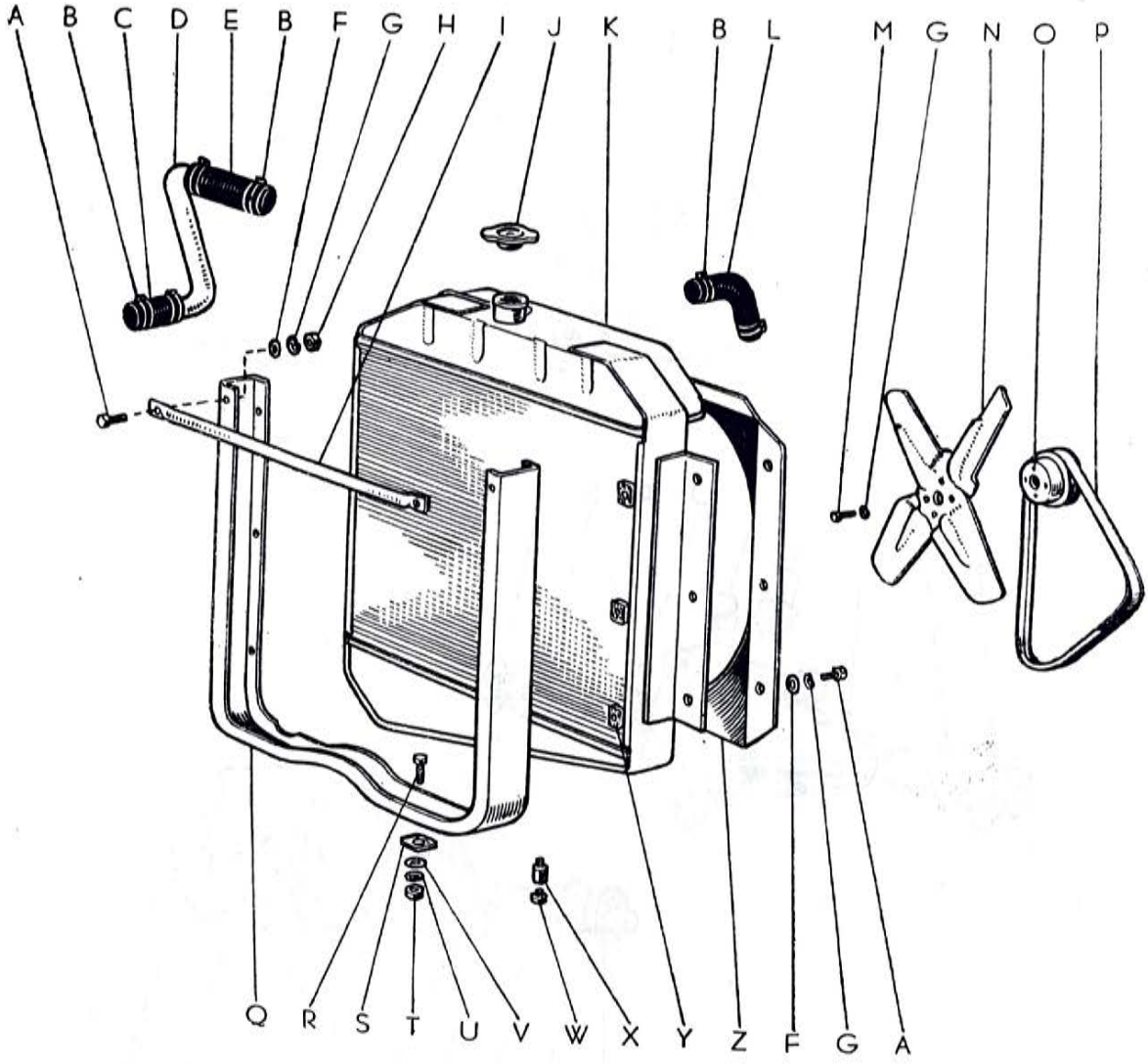

KEY	PART NO.	PART NAME	PER CAR	MODEL
(FIG. 13)				
G	SWH 08	Washer, spring	8	
H	TNN 0806	Nut	2	
I	BD 22166	Rod, radiator stay	1	BJ25. BJ25L
J	FA 22201	Radiator cap complete	1	BJ25. BJ25L
K	2BJ 22100	Radiator assembly (includes KEY—J of Fig.—13)	1	BJ25. BJ25L
L	2BJ 16412	Hose, radiator inlet	1	BJ25. BJ25L
M	TBN 0815Z	Bolt	4	
N	BX 16311	Blade, fan	1	BJ25. BJ25L
O	1085	Water pump pulley complete	1	BJ25. BJ25L
P	1898	Belt, fan	1	BJ25. BJ25L
Q	BJ 22103	Radiator stay complete (includes KEY—A, F~I, Q of Fig.—13)	1	BJ25. BJ25L
R	KB 2821	Bolt, radiator stay set	2	BJ25. BJ25L
S	KB 7601	Shim, cowl bracket front	2	BJ25. BJ25L
T	TNN 1008	Nut	2	
U	SWH 10	Washer, spring	2	
V	PWL 0010	Washer, plate	2	
	F 12101	Water cock complete (includes KEY—W, X of Fig.—13)	1	BJ25. BJ25L
W	FA 22242	Cock, radiator drain	1	BJ25. BJ25L
X	F 12151	Body, water cock	1	BJ25. BJ25L
Y	2822	Shim, radiator clamp	6	BJ25. BJ25L
Z	2BJ 22161	Shroud, fan	1	BJ25. BJ25L

SPACE FOR MEMO

FIG.—14 IGNITION CORD & BATTERY

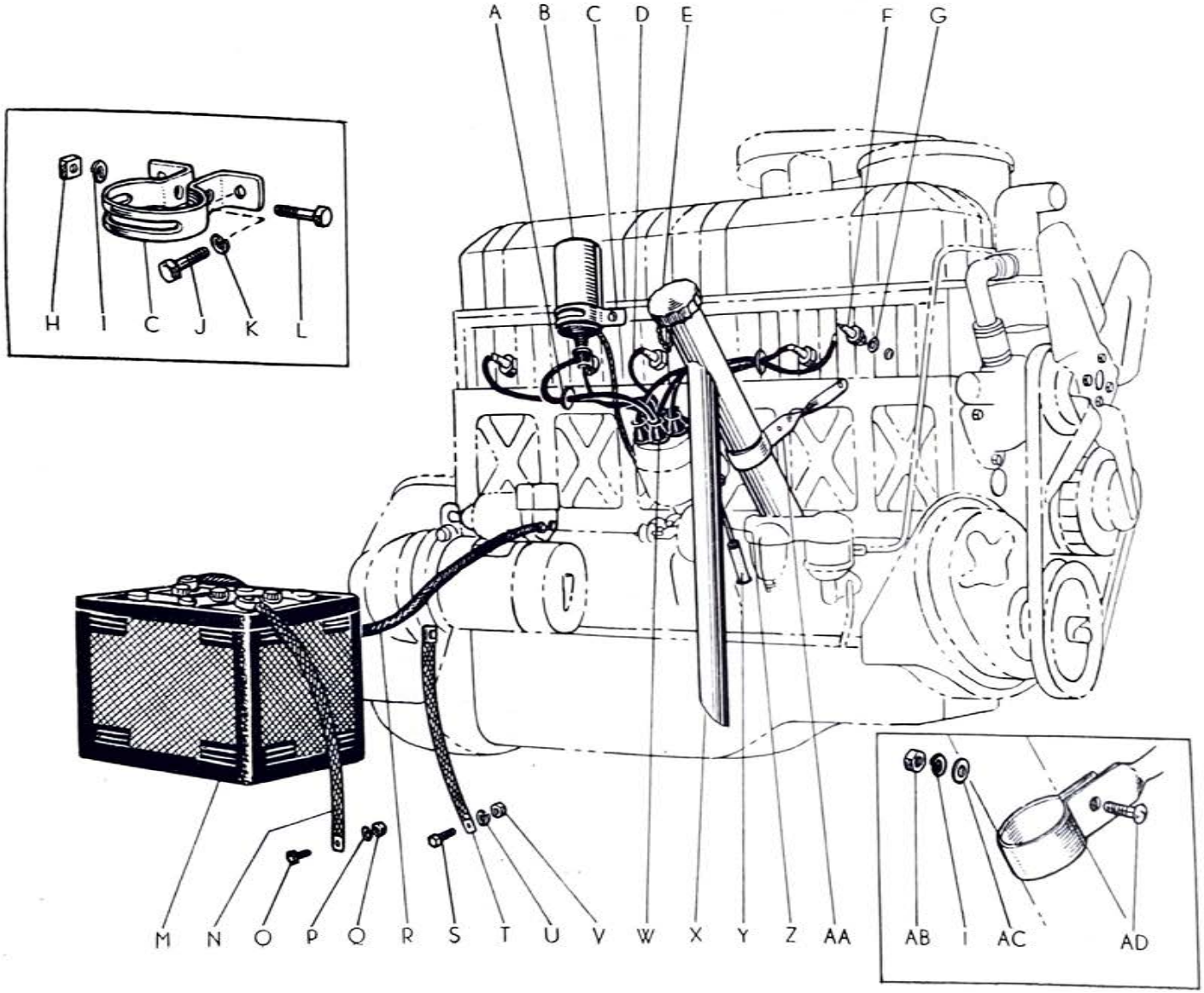

KEY	PART NO.	PART NAME	PER CAR	MODEL

IGNITION COIL, CORD, BATTERY & EARTH BAND

(FIG. 14)

A	5416	Clamp, distributor ignition cord	2	BJ25. BJ25L
B	F 29500	Ignition coil assembly	1	BJ25. BJ25L
C	F 18295	Plate, ignition coil set	1	BJ25. BJ25L
	F 18200	Distributor ignition cord assembly (includes KEY—A, D, W of Fig.—14)	1	BJ25. BJ25L
D	F 18201	Distributor ignition cord complete	1	BJ25. BJ25L
E	BX 12820	Oil filler tube cap with chain assembly	1	BJ25. BJ25L
F	F 27600	Plug, spark	6	BJ25. BJ25L
G	5502	Gasket, spark plug	6	BJ25. BJ25L
H	FNT 0605	Nut	1	
I	SWH 06	Washer, spring	2	
J	TBN 0815TZ	Bolt	2	
K	SWH 08	Washer, spring	2	
L	JBN 0645TZ	Bolt	1	
M	BX 28800	Battery	1	BJ25. BJ25L
N	5314	Band, battery earth	1	BJ25. BJ25L
O	TBN 1020Z	Bolt	1	
P	SWH 10	Washer, spring	1	
Q	TNN 1008Z	Nut	1	
R	BJ 18206	Battery starter cable complete	1	BJ25. BJ25L
S	TBN 1225Z	Bolt	1	
T	5339	Band, engine earth	1	BJ25. BJ25L
U	SWH 12	Washer, spring	1	
V	TNN 1210Z	Nut	1	
W	5407	Cushion, distributor cord	8	BJ25. BJ25L
	BJ20 12810	Oil filler tube assembly (includes KEY—E, X of Fig.—14)	1	BJ25. BJ25L
X	BJ20 12801	Oil filler tube complete	1	BJ25. BJ25L
Y	F 11151	Pipe, oil level gauge rod	1	BJ25. BJ25L
Z	F 12802	Oil level gauge rod complete	1	BJ25. BJ25L
AA	F 12821	Supporter, oil filler tube	1	BJ25. BJ25L
AB	JNT 0605	Nut	1	
AC	PWL 2006	Washer, plate	1	
AD	MBN 0620Z	Bolt	1	

FIG.—15 MANIFOLD

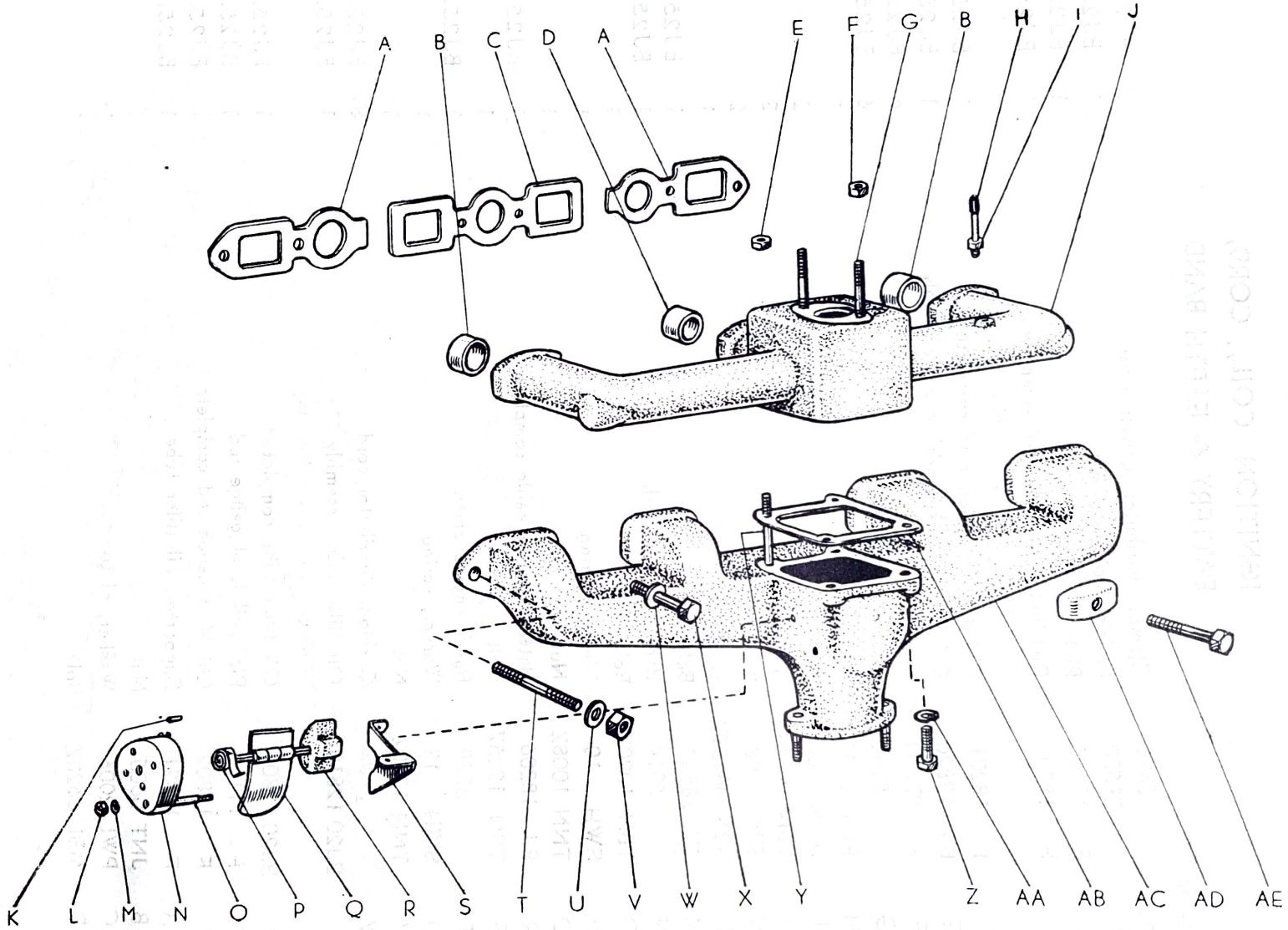

KEY	PART NO.	PART NAME	PER CAR	MODEL

MANIFOLD & HEAT DUMPER

(FIG. 15)	F 17301	Manifold packing complete (includes KEY—A, C of Fig—15)	1	BJ25. BJ25L
A	F 17342	Packing, manifold end	2	BJ25. BJ25L
B	F 17211	Collar, intake manifold (large)	2	BJ25. BJ25L
C	F 17341	Packing, manifold center	1	BJ25. BJ25L
D	F 17212	Collar, intake manifold (small)	1	BJ25. BJ25L
E	TNN 1008	Nut	2	
F	TNN 1008Z	Nut	2	
G	1955	Bolt, carburetor set stud	2	BJ25. BJ25L
H	BX 17462	Cap, intake manifold suction plug gum	1	BJ25. BJ25L
I	BX 17461	Plug, intake manifold suction hole	1	BJ25. BJ25L
J	FJ 17111	Manifold, intake	1	BJ25. BJ25L
	BX 17200	Heat dumper assembly (includes KEY—K~R of Fig.—15)	1	BJ25. BJ25L
K	BX 17216	Pin, heat dumper case knock	1	
L	JNT 0605	Nut	1	
M	SWH 06	Washer, spring	1	BJ25. BJ25L
N	BX 17213	Case, heat dumper bimetal set	1	BJ25. BJ25L
O	BX 17217	Bolt, heat dumper case knock stud	1	BJ25. BJ25L
P	BX 17211	Coil, heat control dumper	1	BJ25. BJ25L
Q	1933	Dumper, manifold heat control	1	BJ25. BJ25L
R	B 17201	Manifold heat dumper shaft complete	1	BJ25. BJ25L
S	BX 17221	Stopper, manifold heat control counter weight	1	BJ25. BJ25L
T	1953	Bolt, exhaust manifold clamp stud	2	BJ25. BJ25L
U	1959	Washer, plate	2	BJ25. BJ25L
V	1952	Nut, manifold clamp & exhaust pipe set	2	BJ25. BJ25L
W	1951	Washer, manifold clamp	2	BJ25. BJ25L
X	YBK 1030Z	Bolt	2	
Y	1954	Bolt, intake & exhaust manifold stud	2	BJ25. BJ25L
Z	YBK 1025T	Bolt	2	
AA	SWH 10	Washer, spring	2	
AB	1942	Packing, manifold	1	BJ25. BJ25L
AC	FX 17151	Manifold, exhaust	1	BJ25. BJ25L
AD	1950	Clamp, manifold	4	BJ25. BJ25L
AE	YBK 1035Z	Bolt	4	

FIG.—16 EXHAUST PIPE & MUFFLER

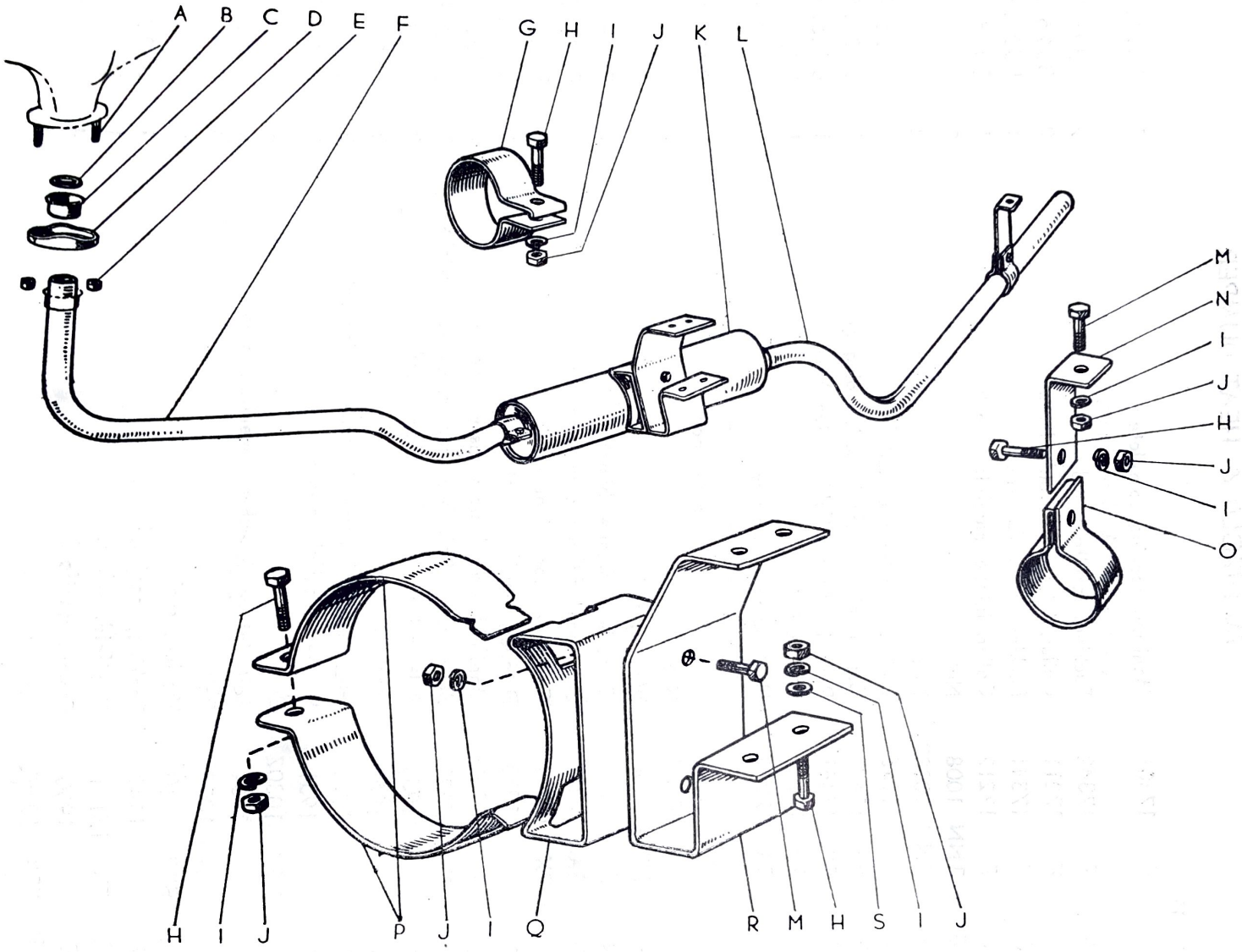

KEY	PART NO.	PART NAME	PER CAR	MODEL

EXHAUST PIPE & MUFFLER

(FIG. 16)

A	1956	Bolt, exhaust pipe set stud	2	BJ25. BJ25L
B	F 23213	Packing, exhaust pipe	1	BJ25. BJ25L
C	F 23214	Collar, exhaust pipe end	1	BJ25. BJ25L
D	F 23215	Flange, exhaust pipe packing	1	BJ25. BJ25L
E	1952	Nut, manifold clamp & exhaust pipe set	1	BJ25. BJ25L
	2BJ 23101	Front exhaust pipe complete	2	BJ25. BJ25L
		(includes KEY—C, F of Fig.—16)	1	BJ25. BJ25L
F	2BJ 23111	Pipe, front exhaust	1	BJ25. BJ25L
G	KB 2509	Clamp, muffler inlet pipe	2	BJ25. BJ25L
H	TBN 1025	Bolt	8	
I	SWH 10	Washer, spring	11	
J	TNN 1008	Nut	11	
K	BJ 23130	Muffler assembly	1	BJ25. BJ25L
L	2BJ 23181	Pipe, rear exhaust	1	BJ25. BJ25L
M	TBN 1020	Bolt	3	
N	BQ 23214	Clamp, rear exhaust pipe (B)	1	BJ25. BJ25L
O	BL 23211	Clamp, exhaust pipe	1	BJ25. BJ25L
P	BL 23216	Clamp, muffler (2)	2	BJ25. BJ25L
Q	BJ 23221	Bracket, muffler clamp	1	BJ25. BJ25L
R	2BJ 23211	Bracket, muffler sub	1	BJ25. BJ25L
S	PWL 0010	Washer, plate	4	

AIR CLEANER

(FIG. 17)

	2BJ 23310	Air cleaner assembly	1	BJ25. BJ25L
		(includes KEY—A~J of Fig.—17)		
A	F 23301	Air cleaner cap nut complete	1	BJ25. BJ25L
B	2BJ 23302	Air cleaner cap complete	1	BJ25. BJ25L
C	2BJ 23331	Packing, air cleaner filter	2	BJ25. BJ25L
D	BX 23302	Air cleaner filter element complete	1	BJ25. BJ25L
	2BJ 23320	Air cleaner case assembly	1	BJ25. BJ25L
		(includes KEY—A~C, E of Fig.—17)		
E	2BJ 23301	Air cleaner case complete	1	BJ25. BJ25L
F	FA 23329	Packing, air cleaner outlet collar	1	BJ25. BJ25L
G	2466	Clamp, air cleaner outlet collar	1	BJ25. BJ25L
H	JBN 0635TZ	Bolt	1	
I	SWH 06	Washer, spring	5	
J	FNT 0605	Nut	1	
K	JNN 0605	Nut	4	
L	PWL 2006	Washer, plate	4	
M	BQ 18321	Bracket, air cleaner	1	BJ25. BJ25L

FIG.—17 AIR CLEANER

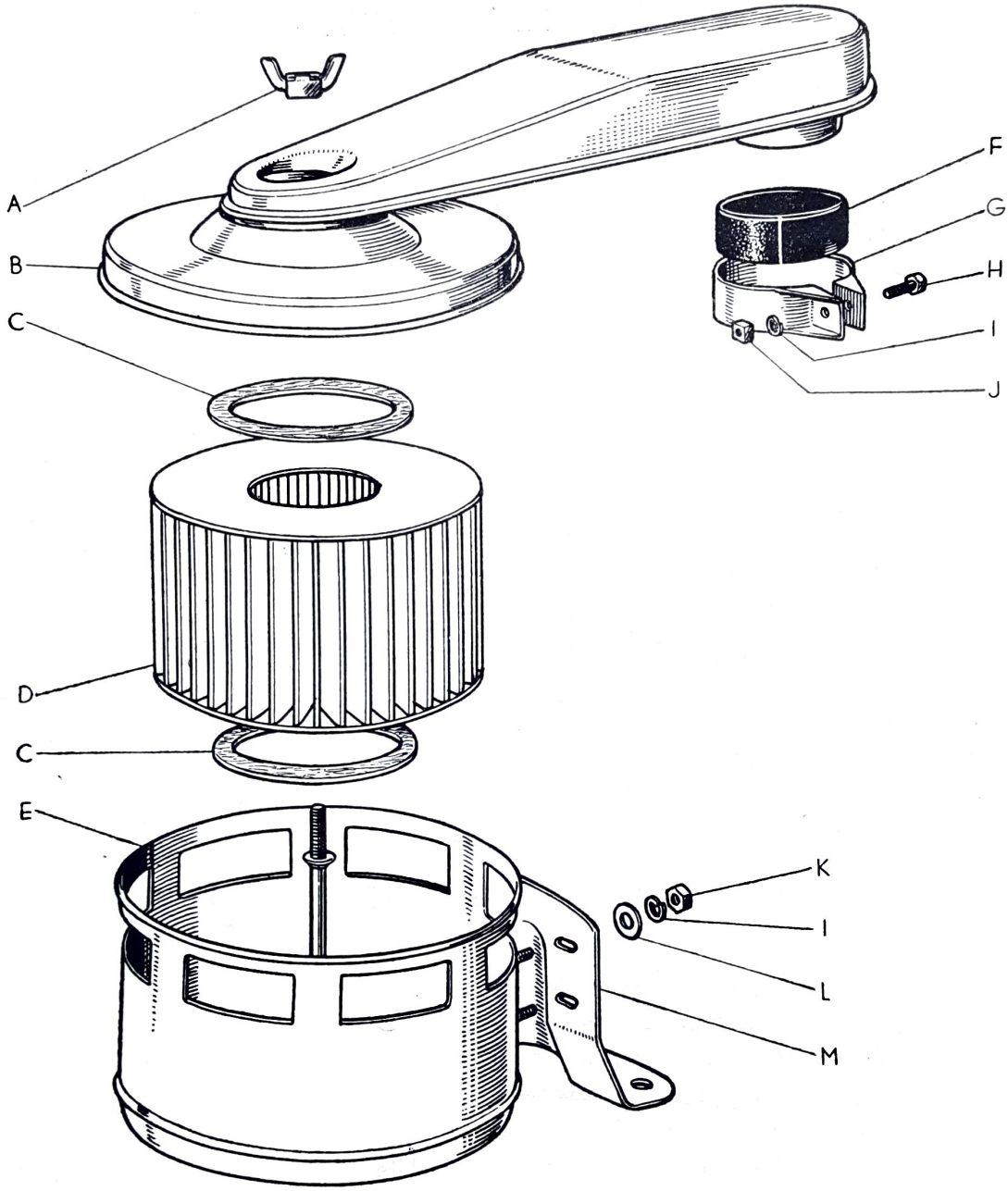

KEY	PART NO.	PART NAME	PER CAR	MODEL

FUEL PUMP (Kyosan)

(Fuel pump supplied is of either Kyosan or Aisan or Nikki product.)

(FIG. 18)

	K-F 25400	Fuel pump assembly (includes KEY—A~AE, AG~AJ of Fig.—18)	1	BJ25. BJ25L
A	2342	Nipple, fuel pump union	2	BJ25. BJ25L
B	K-B 25449	Screw, valve retainer set	4	BJ25. BJ25L
C	F 25448	Retainer, valve	2	BJ25. BJ25L
D	K-B 25447	Packing, valve	2	BJ25. BJ25L
E	K-B 25440	Valve complete	2	BJ25. BJ25L
F	K-B 25414	Gasket, filter bowl	1	BJ25. BJ25L
G	BX 25430	Filter screen complete	1	BJ25. BJ25L
H	K-BX 25439	Spring, filter screen set	1	BJ25. BJ25L
I	K-BX 25415	Bowl, filter	1	BJ25. BJ25L
	K-B 25420	Filter bowl bail complete (includes KEY—J~M of Fig.—18)	1	BJ25. BJ25L
J	K-B 25421	Bail, filter bowl	1	BJ25. BJ25L
K	K-B 25424	Seat, filter bowl bail	1	BJ25. BJ25L
L	K-B 25423	Nut, filter bowl bail	1	BJ25. BJ25L
M	K-B 25422	Screw, filter bowl bail set	1	BJ25. BJ25L
N	K-B 25477	Bolt, pump cover set	6	BJ25. BJ25L
O	K-B 25478	Washer, pump cover set bolt	6	BJ25. BJ25L
P	F 25419	Washer, upper body set screw	2	BJ25. BJ25L
Q	F 25418	Screw, upper body set	2	BJ25. BJ25L
R	F 25411	Cover, pump	1	BJ25. BJ25L
S	F 25417	Packing, pump cover	1	BJ25. BJ25L
T	F 25413	Body, pump upper	1	BJ25. BJ25L
U	K-B 25450	Diaphragm complete	1	BJ25. BJ25L
V	K-B 25465	Spring, oil seal	1	BJ25. BJ25L
W	K-B 25461	Spring, diaphragm	1	BJ25. BJ25L
X	K-B 25462	Retainer, oil seal spring	1	BJ25. BJ25L
Y	K-B 25463	Packing, oil seal	2	BJ25. BJ25L
Z	K-B 25464	Retainer, oil seal packing	1	BJ25. BJ25L
AA	K-B 25412	Body, pump	1	BJ25. BJ25L
AB	K-B 25475	Spring, rocker arm	1	BJ25. BJ25L
AC	K-B 25470	Rocker arm complete	1	BJ25. BJ25L
AD	K-B 25476	Pin, rocker arm	1	BJ25. BJ25L
AE	K-B 25474	Link, rocker arm	1	BJ25. BJ25L
AF	2343	Packing, fuel pump	1	BJ25. BJ25L
AG	K-B 25482	Pin, hand lever	1	BJ25. BJ25L
AH	K-B 25484	Retainer, hand lever packing	2	BJ25. BJ25L
AI	K-B 25483	Packing, hand lever	2	BJ25. BJ25L
	K-B 25480	Hand lerver complete (includes KEY—AG~AJ of Fig.—18)	1	BJ25. BJ25L
AJ	K-B 25481	Lever, hand	1	BJ25. BJ25L

FIG.—18 FUEL PUMP

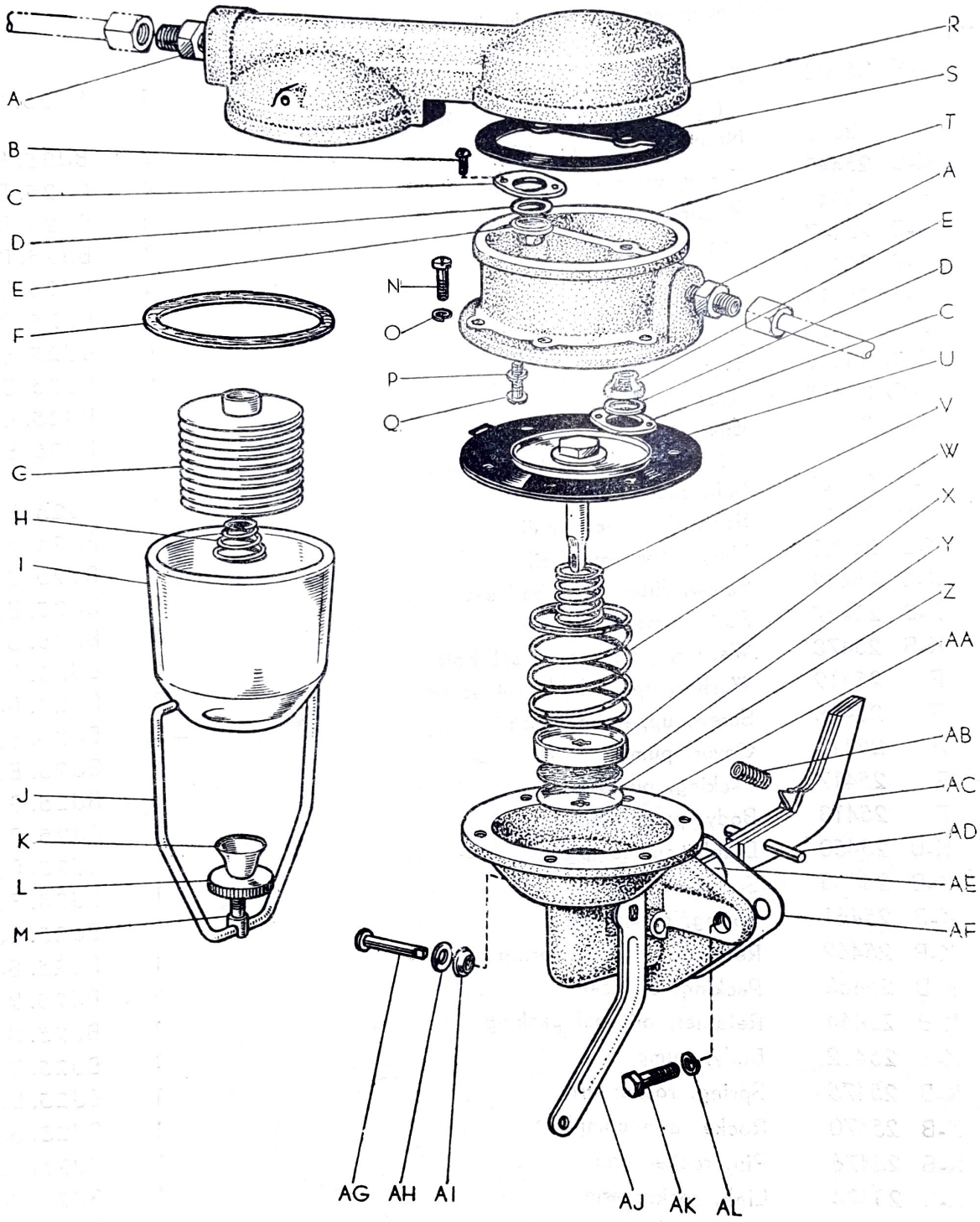

KEY	PART NO.	PART NAME	PER CAR	MODEL
(FIG. 18)				
AK	TBN 0820TZ	Bolt	2	
AL	SWH 08	Washer, spring	2	

FUEL PUMP (Aisan)

(Fuel Pump supplied is of either Aisan or Kyosan or Nikki product.)

(FIG. 18)				
	A-F 25400	Fuel pump assembly (includes KEY—A~AE, AG~AJ of Fig.—18)	1	BJ25. BJ25L
A	2342	Nipple, fuel pump union	2	BJ25. BJ25L
B	A-B 25449	Screw, valve retainer set	4	BJ25. BJ25L
C	F 25448	Retainer, valve	2	BJ25. BJ25L
D	A-B 25447	Packing, valve	2	BJ25. BJ25L
E	A-B 25440	Valve complete	2	BJ25. BJ25L
F	A-B 25414	Gasket, filter bowl	1	BJ25. BJ25L
G	BX 25430	Filter screen complete	1	BJ25. BJ25L
H	A-BX 25439	Spring, filter screen set	1	BJ25. BJ25L
I	A-BX 25415	Bowl, filter	1	BJ25. BJ25L
	A-B 25420	Filter bowl bail complete (includes KEY—J~M of Fig.—18)	1	BJ25. BJ25L
J	A-B 25421	Bail, filter bowl	1	BJ25. BJ25L
K	A-B 25424	Seat, filter bowl bail	1	BJ25. BJ25L
L	A-B 25423	Nut, filter bowl bail	1	BJ25. BJ25L
M	A-B 25422	Screw, filter bowl bail set	1	BJ25. BJ25L
N	A-B 25477	Bolt, pump cover set	6	BJ25. BJ25L
O	A-B 25478	Washer, pump cover set bolt	6	BJ25. BJ25L
P	F 25419	Washer, upper body set screw	2	BJ25. BJ25L
Q	F 25418	Screw, upper body set	2	BJ25. BJ25L
R	F 25411	Cover, pump	1	BJ25. BJ25L
S	F 25417	Packing, pump cover	1	BJ25. BJ25L
T	F 25413	Body, pump upper	1	BJ25. BJ25L
U	A-B 25450	Diaphragm complete	1	BJ25. BJ25L
V	A-B 25465	Spring, oil seal	1	BJ25. BJ25L
W	A-B 25461	Spring, diaphragm	1	BJ25. BJ25L
X	A-B 25462	Retainer, oil seal spring	1	BJ25. BJ25L
Y	A-B 25463	Packing, oil seal	2	BJ25. BJ25L
Z	A-B 25464	Retainer, oil seal packing	1	BJ25. BJ25L
AA	A-B 25412	Body, pump	1	BJ25. BJ25L
AB	A-B 25475	Spring, rocker arm	1	BJ25. BJ25L
AC	A-B 25470	Rocker arm complete	1	BJ25. BJ25L
AD	A-B 25476	Pin, rocker arm	1	BJ25. BJ25L
AE	A-B 25474	Link, rocker arm	1	BJ25. BJ25L
AF	2343	Packing, fuel pump	1	BJ25. BJ25L
AG	A-B 25482	Pin, hand lever	1	BJ25. BJ25L
AH	A-B 25484	Retainer, hand lever packing	2	BJ25. BJ25L
AI	A-B 25483	Packing, hand lever	2	BJ25. BJ25L

KEY	PART NO.	PART NAME	PER CAR	MODEL
(FIG. 18)				
	A-B 25480	Hand lever complete (includes KEY —AG~AJ of Fig.—18)	1	BJ25. BJ25L
AJ	A-B 25481	Lever, hand	1	BJ25. BJ25L
AK	TBN 0820TZ	Bolt		
AL	SWH 08	Washer, spring		

FUEL PUMP (Nikki)

(Fuel pump supplied is of either Nikki or Kyosan or Aisan product.)

(FIG. 18)				
	N-F 25400	Fuel pump assembly (includes KEY—A~AE, AG~AJ of Fig.—18)	1	BJ25. BJ25L
A	2342	Nipple, fuel pump union	2	BJ25. BJ25L
B	N-B 25449	Screw, valve retainer set	4	BJ25. BJ25L
C	F 25448	Retainer, valve	2	BJ25. BJ25L
D	N-B 25447	Packing, valve	2	BJ25. BJ25L
E	N-B 25440	Valve complete	2	BJ25. BJ25L
F	N-B 25414	Gasket, filter bowl	1	BJ25. BJ25L
G	BX 25430	Filter screen complete	1	BJ25. BJ25L
H	N-BX25439	Spring, filter screen set	1	BJ25. BJ25L
I	N-BX25415	Bowl, filter	1	BJ25. BJ25L
	N-B 25420	Filter bowl bail complete (includes KEY—J~M of Fig.—18)	1	BJ25. BJ25L
J	N-B 25421	Bail, filter bowl	1	BJ25. BJ25L
K	N-B 25424	Seat, filter bowl bail	1	BJ25. BJ25L
L	N-B 25423	Nut, filter bowl bail	1	BJ25. BJ25L
M	N-B 25422	Screw, filter bowl bail set	1	BJ25. BJ25L
N	N-B 25477	Bolt, pump cover set	6	BJ25. BJ25L
O	N-B 25478	Washer, pump cover set bolt	6	BJ25. BJ25L
P	F 25419	Washer, upper body set screw	2	BJ25. BJ25L
Q	F 25418	Screw, upper body set	2	BJ25. BJ25L
R	F 25411	Cover, pump	1	BJ25. BJ25L
S	F 25417	Packing, pump cover	1	BJ25. BJ25L
T	F 25413	Body, pump upper	1	BJ25. BJ25L
U	N-B 25450	Diaphragm complete	1	BJ25. BJ25L
V	N-B 25465	Spring, oil seal	1	BJ25. BJ25L
W	N-B 25461	Spring, diaphragm	1	BJ25. BJ25L
X	N-B 25462	Retainer, oil seal spring	1	BJ25. BJ25L
Y	N-B 25463	Packing, oil seal	2	BJ25. BJ25L
Z	N-B 25464	Retainer, oil seal packing	1	BJ25. BJ25L
AA	N-B 25412	Body, pump	1	BJ25. BJ25L
AB	N-B 25475	Spring, rocker arm	1	BJ25. BJ25L
AC	N-B 25470	Rocker arm complete	1	BJ25. BJ25L
AD	N-B 25476	Pin, rocker arm	1	BJ25. BJ25L
AE	N-B 25474	Link, rocker arm	1	BJ25. BJ25L
AF	2343	Packing, fuel pump	1	BJ25. BJ25L

KEY	PART NO.	PART NAME	PER CAR	MODEL
(FIG. 18)				
AG	N-B 25482	Pin, hand lever	1	BJ25. BJ25L
AH	N-B 25484	Retainer, hand lever packing	2	BJ25. BJ25L
AI	N-B 25483	Packing, hand lever	2	BJ25. BJ25L
	N-B 25480	Hand lever complete (includes KEY—AG~AJ of Fig.—18)	1	BJ25. BJ25L
AJ	N-B 25481	Lever, hand	1	BJ25. BJ25L
AK	TBN 0820TZ	Bolt	2	
AL	SWH 08	Washer, spring	2	

CARBURETOR

(FIG. 19)				
	N-BX25500	Carburetor assembly (includes KEY—A~AV, AX~CC of Fig.—19)	1	BJ25. BJ25L
A	A-B 25517	Washer, set screw	7	BJ25. BJ25L
B	N-B 25646	Screw, dust cover set	3	BJ25. BJ25L
C	N-BX25515	Cover, dust	1	BJ25. BJ25L
D	A-S 25661	Support, metering rod boot	1	BJ25. BJ25L
E	N-B 25659	Boot, metering rod	1	BJ25. BJ25L
F	A-B 25641	Pin, metering rod	1	BJ25. BJ25L
G	A-B 25579	Link, pump connecting	1	BJ25. BJ25L
H	A-B 25642	Ring, snap	4	BJ25. BJ25L
I	A-B 25644	Ring, pump arm counter shaft snap	1	BJ25. BJ25L
J	BX 25578	Shaft, pump arm counter	1	BJ25. BJ25L
K	BX 25587	Collar, pump arm	1	BJ25. BJ25L
L	N-B 25577	Arm, pump	1	BJ25. BJ25L
M	BX 25541	Rod, metering	1	BJ25. BJ25L
	BX 25541-1	Rod, metering O. S.	1	BJ25. BJ25L
N	A-B 25575	Gasket, pump cylinder	1	BJ25. BJ25L
O	A-B 25561	Shaft, plunger	1	BJ25. BJ25L
P	A-B 25562	Washer, plunger outer	1	BJ25. BJ25L
Q	A-B 25563	Leather, plunger	1	BJ25. BJ25L
R	A-B 25564	Washer, plunger inner	1	BJ25. BJ25L
S	A-B 25565	Spring, plunger	1	BJ25. BJ25L
T	A-B 25566	Piston, plunger	1	BJ25. BJ25L
U	A-B 25567	Washer, plunger lock	1	BJ25. BJ25L
V	A-B 25568	Nut, plunger piston set	1	BJ25. BJ25L
W	BX 25623	Lever, choke valve	1	BJ25. BJ25L
X	A-B 25625	Screw, choke wire set	1	BJ25. BJ25L
Y	A-B 25624	Stopper, choke wire	1	BJ25. BJ25L
Z	N-B 25632	Spring, choke valve shaft arm	1	BJ25. BJ25L
AA	A-B 25647	Nut, throttle & choke wire guide support	2	BJ25. BJ25L
AB	N-B 25645	Support, throttle & choke wire guide	1	BJ25. BL25L
AC	A-B 25615	Screw, throttle valve lever adjusting	1	BJ25. BJ25L
AD	A-B 25616	Spring, throttle valve lever adjusting screw	1	BJ25. BJ25L
AE	A-B 25613	Lever, throttle valve	1	BJ25. BJ25J

FIG.—19 CARBURETOR

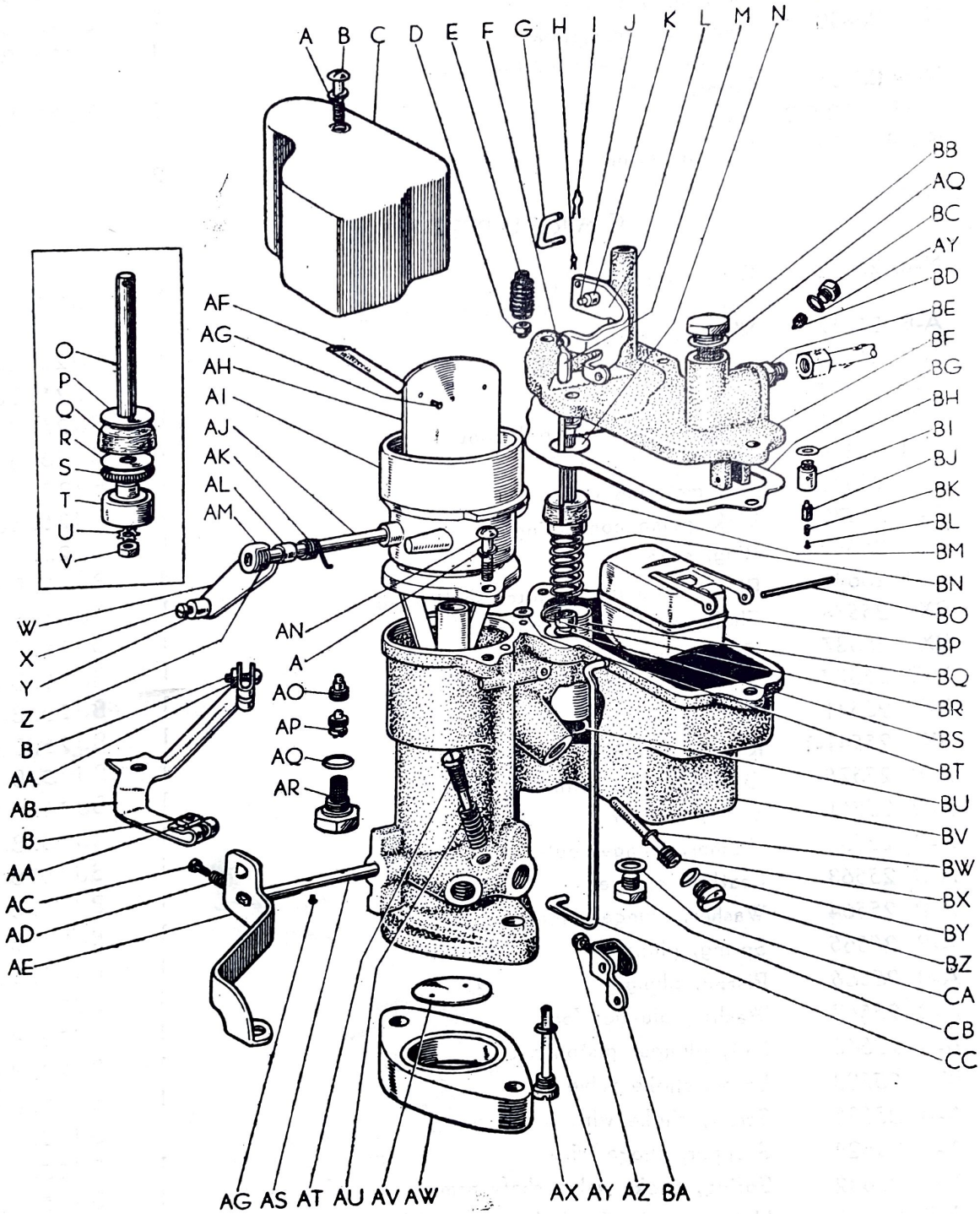

KEY	PART NO.	PART NAME	PER CAR	MODEL
(FIG. 19)				
AF	BX 25662	Tube, air vent	1	BJ25. BJ25L
AG	N-B 25614	Screw, valve attaching	4	BJ25. BJ25L
	A-BX25620	Choke valve complete	1	BJ25. BJ25L
		(includes KEY—W~Z, AG, AH, AJ~AM of Fig.—19)		
AH	BX 25621	Valve, choke	1	BJ25. BJ25L
AI	BX 25512	Horn, air	1	BJ25. BJ25L
AJ	BX 25622	Shaft, choke valve	1	BJ25. BJ25L
AK	BX 25626	Spring, choke lever	1	BJ25. BJ25L
AL	BX 25631	Collar, choke valve lever	1	BJ25. BJ25L
AM	BX 25629	Arm, choke valve shaft	1	BJ25. BJ25L
AN	N-B 25516	Screw, air horn set	6	BJ25. BJ25L
AO	N-B 25570	Intake ball check valve complete	1	BJ25. BJ25L
AP	N-B 25580	Discharge ball check valve complete	1	BJ25. BJ25L
AQ	N-B 25523	Gasket, inlet strainer plug	2	BJ25. BJ25L
AR	N-B 25590	Ball check strainer complete	1	BJ25. BJ25L
AS	N-B 25612	Shaft, throttle valve	1	BJ25. BJ25L
AT	A-B 25548	Screw, idle adjusting	1	BJ25. BJ25L
AU	A-B 25549	Spring, idle adjusting screw	1	BJ25. BJ25L
	N-B 25610	Throttle Valve complete	1	BJ25. BJ25L
		(includes KEY—AC~AE, AG, AS, AV, AZ, BA of Fig.—19)		
AV	A-B 25611	Valve, throttle	1	BJ25. BJ25L
AW	1941	Packing, carburetor	1	BJ25. BJ25L
AX	N-B 25546	Jet, low speed	1	BJ25. BJ25L
AY	N-B 25547	Gasket, jet	2	BJ25. BJ25L
AZ	A-B 25619	Screw, throttle shaft arm clamp	1	BJ25. BJ25L
BA	A-B 25618	Arm, throttle shaft	1	BJ25. BJ25L
BB	A-B 25520	Inlet strainer complete	1	BJ25. BJ25L
BC	N-B 25583	Plug, pump jet	1	BJ25. BJ25L
BD	A-B 25582	Jet, pump	1	BJ25. BJ25L
BE	2342	Nipple, fuel pump union	1	BJ25. BJ25L
BF	A-BX25513	Cover, bowl	1	BJ25. BJ25L
BG	N-B 25514	Gasket, bowl cover	1	BJ25. BJ25L
BH	N-B 25527	Gasket, needle valve seat	1	BJ25. BJ25L
BI	N-B 25526	Seat, needle valve	1	BJ25. BJ25L
	BX 25502	Needle valve complete	1	BJ25. BJ25L
		(includes KEY—BJ~BL of Fig.—19)		
BJ	BX 25525	Valve, needle	1	BJ25. BJ25L
BK	BX 25529	Spring, needle valve	1	BJ25. BJ25L
BL	BX 25528	Pin, needle valve push	1	BJ25. BJ25L
BM	N-B 25560	Plunger complete	1	BJ25. BJ25L
		(includes KEY—O~V of Fig.—19)		
BN	A-B 25576	Spring, pump	1	BJ25. BJ25L
BO	A-B 25533	Pin, float lever	1	BJ25. BJ25L
BP	N-B 25530	Float & lever complete	1	BJ25. BJ25L
		(includes KEY—BO of Fig.—19)		

KEY	PART NO.	PART NAME	PER CAR	MODEL
(FIG. 19)				
BQ	A-B 25573	Clyinder, pump	1	BJ25. BJ25L
BR	N-B 25542	Jet, metering rod	1	BJ25. BJ25L
BS	N-B 25543	Gasket, metering rod jet	1	BJ25. BJ25L
BT	BX 25663	Packing, air vent passage	1	BJ25. BJ25L
BU	A-B 25574	Packing, pump cylinder	1	BJ25. BJ25L
BV	N-B 25511	Body, carburetor	1	BJ25. BJ25L
BW	A-B 25552	Gasket, main nozzle	1	BJ25. BJ25L
BX	A-B 25551	Nozzle, main	1	BJ25. BJ25L
BY	N-B 25554	Gasket, main nozzle & passage plug	2	BJ25. BJ25L
BZ	A-B 25553	Plug, main nozzle & passage	2	BJ25. BJ25L
CA	N-B 25657	Washer, float chamber plug	2	BJ25. BJ25L
CB	N-B 25656	Plug, float chamber	2	BJ25. BJ25L
CC	A-B 25617	Rod, throttle connecting	1	BJ25. BJ25L

GASOLINE TANK & BAND

(FIG. 20)				
	BJ25 25110	Gasoline tank assembly (includes KEY—A, B, D, F~H, T, U of Fig.—20)	1	BJ25. BJ25L
A	BY 25105	Gasoline, tank cap complete	1	BJ25. BJ25L
B	BY 25164	Packing, gasoline tank cap	1	BJ25. BJ25L
C	BJ25 61219	Cover gum, gasoline tank inlet pipe set	1	BJ25. BJ25L
D	BJ25 25101	Gasoline tank complete	1	BJ25. BJ25L
E	2345	Nut, fuel & gasoline pipe union	4	BJ25. BJ25L
F	BJ25 25114	Gasoline tank suction tube complete	1	BJ25. BJ25L
G	4619	Packing, gasoline tank gauge unit	1	BJ25. BJ25L
H	BJ25 57500	Gasoline tank gauge unit	1	BJ25. BJ25L
I	JBN 0630	Bolt	2	
J	SWL 06	Washer, spring	2	
K	TNN 0605	Nut	2	
	BJ25 25201	Gasoline tank band complete (includes KEY—L, M, R of Fig.—20)	4	BJ25. BJ25L
L	BJ25 25211	Band, gasoline tank	4	BJ25. BJ25L
M	BJ25 25212	Packing, gasoline tank band	4	BJ25. BJ25L
N	2344	Sleeve, fuel & gasoline pipe coupling	4	BJ25. BJ25L
O	2121	Band, fuel pipe	3	BJ25. BJ25L
	BX 18501	Fuel & vacuum control pipe complete (includes KEY—E, N~Q of Fig.—20 and KEY—D, E of Fig.—27)	1	BJ25. BJ25L
	BX 18402	Fuel pump carburetor pipe complete (includes KEY—E, N, P of Fig.—20)	1	BJ25. BJ25L
P	2106	Pipe, fuel pump carburetor	1	BJ25. BJ25L
Q	F 18181	Clamp, fuel & suction pipe support	1	BJ25. BJ25L
R	SB 25264	Pin, gasoline tank band packing	12	BJ25. BJ25L
S	BJ25 61128	Bracket, gasoline tank band outer	2	BJ25. BJ25L
	BJ25 61129	Bracket, gasoline tank band inner	2	BJ25. BJ25L

FIG.—20 GASOLINE TANK & BAND

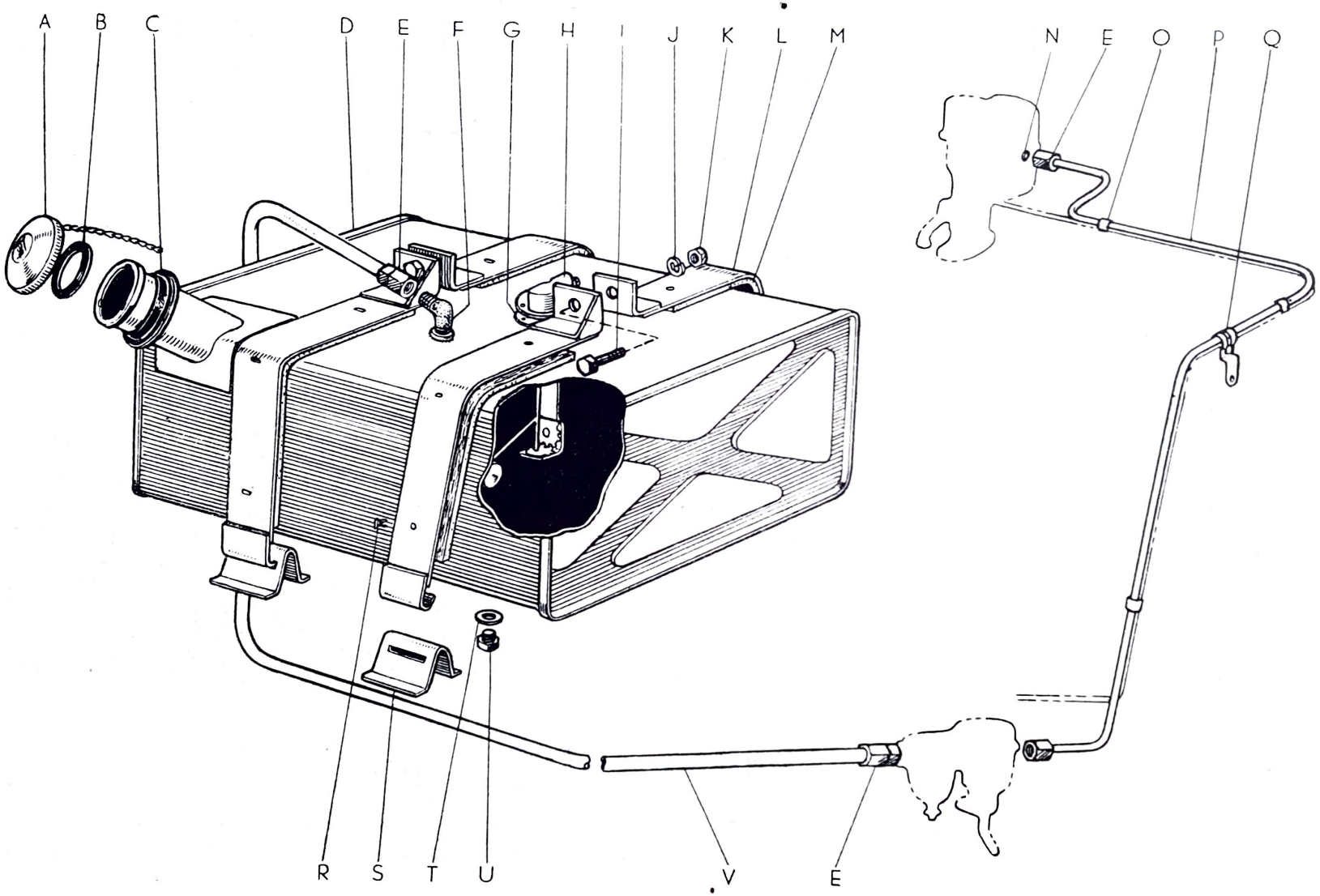

KEY	PART NO.	PART NAME	PER CAR	MODEL
(FIG. 20)				
T	4631	Packing, gasoline tank drani screw	1	BJ25. BJ25L
U	4675	Screw, gasoline tank drain	1	BJ25. BJ25L
V	BJ25 25202	Gasolne vinyl pipe complete	1	BJ25. BJ25L

ACCEL LINK

(FIG. 21)				
A	JNT 0605	Nut	8 (BJ25L=6)	
B	2154	Pin, accel link joint	2	BJ25. BJ25L
	BJ 26203	Accel link complete (carburetor side) (includes KEY—A~C, T, U, AA of Fig.—21)	1	BJ25. BJ25L
C	BJ 26226	Link, accel (link arm side)	1	BJ25. BJ25L
D	TNN 0806	Nut	5 (BJ25L=1)	
E	SWH 08	Washer, sprig	5 (BJ25L=1)	
F	BJ 26222	Bearing, accel pedal L. H.	1	BJ25. BJ25L
G	TBN 0815	Bolt	4	BJ25only
H	BJ 26221	Bearing, accel pedal R. H.	1	BJ25. BJ25L
I	BX 26221	Arm, accel pedal shaft (C)	3	BJ25
J	SWH 06	Washer, spring	6	
K	BX 26211	Bearing, accel pedal shaft	2	BJ25
L	JBN 0615T	Bolt	4 (BJ25L=6)	
M	2BJ 26201	Accel link shaft complete (a) (includes KEY—I of Fig.—21)	1	BJ25
N	2BJ 26212	Arm, accel link shaft	1	BJ25
O	SWH 10	Washer, spring	1	BJ25
P	TNN 1008Z	Nut	1	BJ25
Q	PWT 2006Z	Washer, plate	5 (BJ25L=2)	
R	FA 26215	Shaft, accel link support	1	BJ25
S	FA 26201	Accel pedal complete	1	BJ25
T	WP 2015	Pin, cotter	11 (BJ25L=8)	
U	2109	Spring, accel link pin	6	BJ25. BJ25L
V	PWL 2508Z	Washer, plate	1	
W	2146	Hanger, acceleration spring	1	BJ25. BJ25L
X	2149	Spring, accel link tension	2	BJ25. BJ25L
Y	2BJ 26214	Arm, accel link	1	BJ25. BJ25L
Z	2145	Pin, acceleration link arm	1	BJ25. BJ25L
AA	2148	Stopper, acceleration link arm	1	BJ25. BJ25L
	2BJ 26203	Accel link complete (includes KEY—A, B, U, T, Y, AB of Fig.—21)	1	BJ25
AB	2BJ 26215	Link, accel	1	BJ25
	2BJ 26202	Accel link shaft complete (b) (includes KEY—F, H, I, AC of Fig.—21)	1	BJ25
AC	2BJ 26213	Shaft, accel link	1	BJ25
AD	2BJ 26216	Rod, accel link connecting	1	BJ25
AE	FA 26214	Pin, accel pedal bearing	1	BJ25
AF	FA 26213	Support, accel pedal bearing pin	1	BJ25

KEY	PART NO.	PART NAME	PER CAR	MODEL
(FIG. 21)				
AG	JBN 0615	Bolt	2	BJ25Lonly
AH	BJ25 L 26219	Link, accel	1	BJ25L
AI	JNN 0605	Nut	2	BJ25Lonly
AJ	BJ25 L 26217	Bearing, accel link shaft	1	BJ25L

FIG.—21 ACCEL LINK

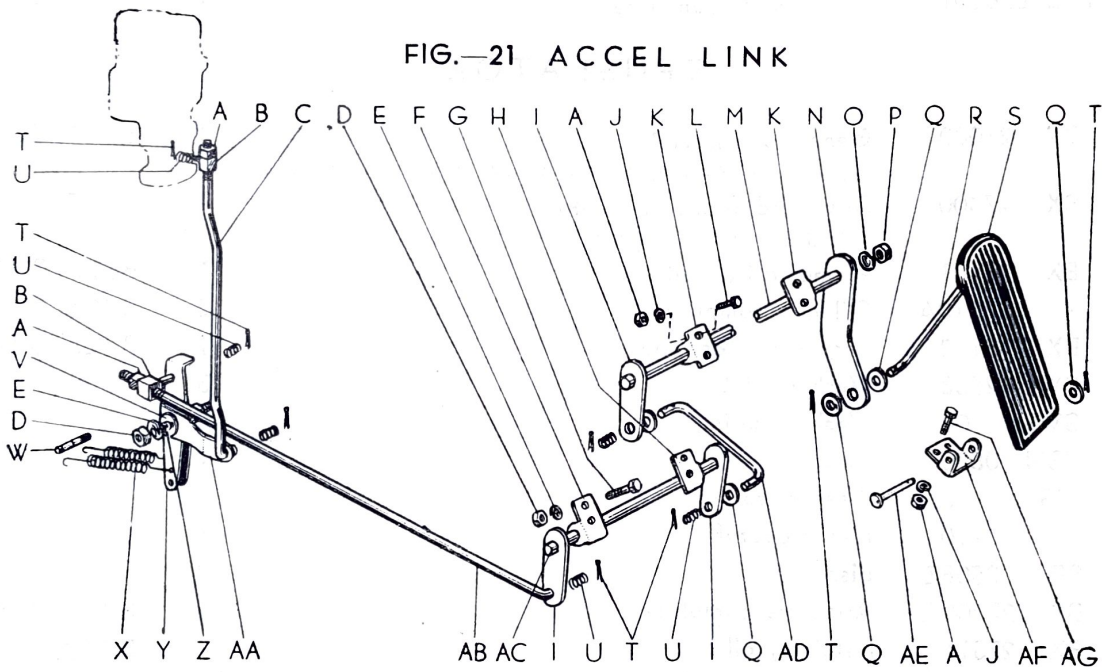

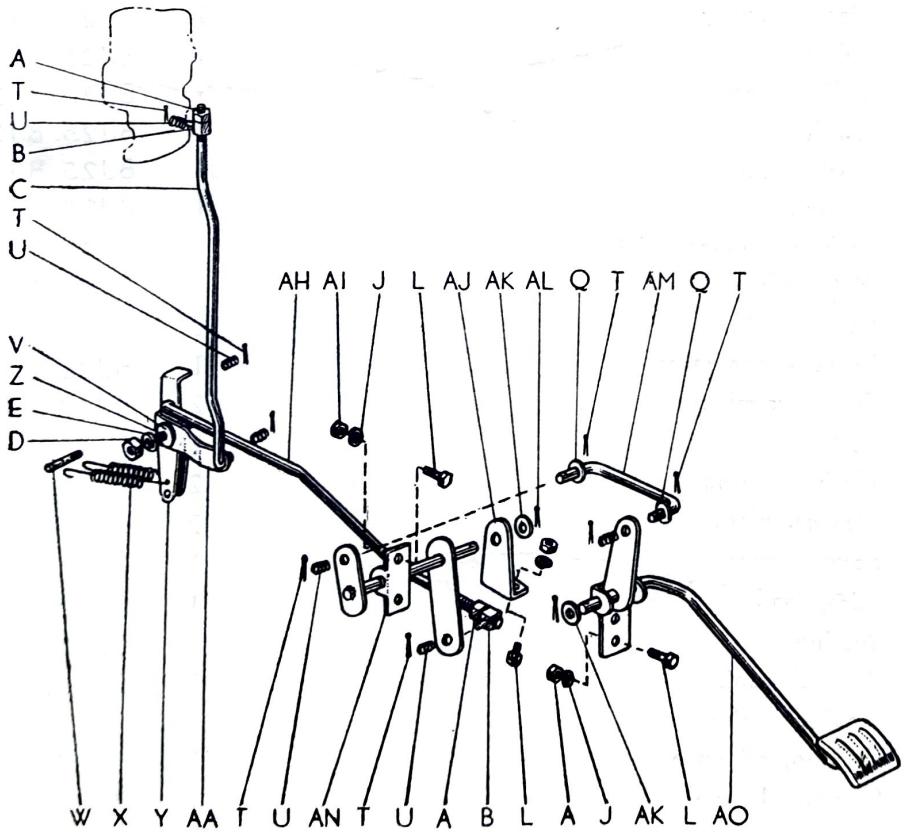

KEY	PART NO.	PART NAME	PER CAR	MODEL
(FIG. 21)				
AK	PWL 0010	Washer, plate	2	BJ25L only
AL	WP 3020	Pin, cotter	2	BJ25L only
AM	BJ25L26218	Rod, accel link connecting	1	BJ25L
AN	BJ25L26202	Accel link shaft complete	1	BJ25L
AO	BJ25L26201	Accel pedal complete	1	BJ25L

GENERATOR

(FIG. 22)				
	BX 27000	Generator assembly (includes KEY—A, B, G~T, W, AA~AI, AK~AW of Fig.—22)	1	BJ25. BJ25L
	BX 27400	Drive end frame complete (includes KEY—A, G, I, O~T of Fig.—22)	1	BJ25. BJ25L
A	BX 27401	Frame, drive end	1	BJ25. BJ25L
B	A 27510A	Oil cup complete	2	BJ25. BJ25L
C	BX 18112	Bar, generator adjust	1	BJ25. BJ25L
D	PWL 2508	Washer, plate	3	
E	SWH 08	Washer, spring	3	
F	TBN 0820Z	Bolt	1	
G	WS 5	Washer, spring	3	
H	5110	Key, woodruff	1	
I	SR 0508Z	Biss	3	
J	BX 27200A	Armature complete	1	BJ25. BJ25L
K	BX 27311	Retainer, oil	1	BJ25. BJ25L
L	A 27203	Nut, pulley lock	1	BJ25. BJ25L
M	A 27204	Washer, pulley lock	1	BJ25. BJ25L
N	BL 27202	Pulley	1	BJ25. BJ25L
O	5142	Collar, space	1	BJ25. BJ25L
P	5143	Oil felt	1	BJ25. BJ25L
Q	BX 27404	Washer, felt	1	BJ25. BJ25L
R	5145	Bearing, ball	1	BJ25. BJ25L
S	5146	Packing, retainer plate	1	BJ25. BJ25L
T	5147	Plate, retainer	1	BJ25. BJ25L
U	TNN 0806	Nut	2	
V	BX 18111	Bracket, generator	1	BJ25. BJ25L
W	A 27111S	Screw, terminal	2	BJ25. BJ25L
X	YBN 1020Z	Bolt	2	
Y	SWH 10	Washer, spring	2	
Z	PWL 0010Z	Washer, plate	2	
AA	SR 0530	Screw, cover	1	
AB	BX 27112	Wire, lead	1	BJ25. BJ25L
AC	B 27502	Bearing	1	BJ25. BJ25L
AD	BX 27005	Bolt, through	2	BJ25. BJ25L
AE	WS 7	Washer, spring	2	
AF	5181B	Packing, oil cover	1	BJ25. BJ25L
AG	5180B	Cover, oil hole	1	BJ25. BJ25L

FIG.—22 GENERATOR

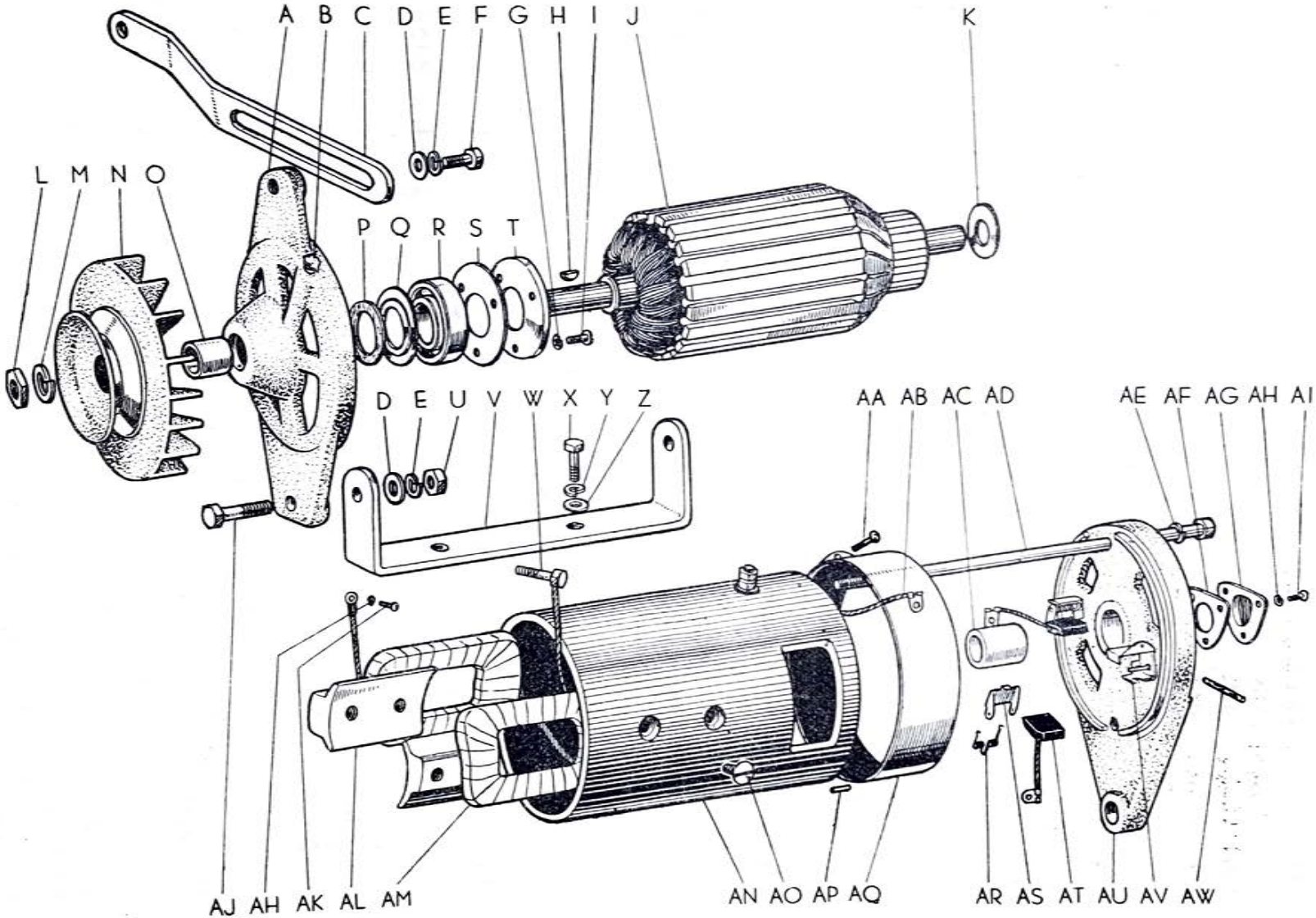

KEY	PART NO.	PART NAME	PER CAR	MODEL
(FIG. 22)				
AH	WS 4	Washer, spring	4	
AI	SR 0408	Biss	3	
AJ	TBN 0830Z	Bolt	2	
AK	SR 0406	Screw, earth	1	
AL	BX 27102	Core, pole	2	BJ25. BJ25L
AM	BX 27104	Field coil complete	1	BJ25. BJ25L
	BX 27100	Housing complete (includes KEY—W, AB, AH, AK,~AP of Fig.—22)	1	BJ25. BJ25L
AN	BX 27101	Yoke	1	BJ25. BJ25L
AO	SP 1022ZC	Screw, core stop	4	
AP	BL 27120A	Pin, knock	2	BJ25. BJ25L
AQ	BX 27010	Band complete	1	BJ25. BJ25L
AR	BX 27608A	Spring, brush	2	BJ25. BJ25L
AS	BX 27609	Arm, brush	2	BJ25. BJ25L
AT	BX 27610	brush, main	2	BJ25. BJ25L
	BX 27500	Commutator end frame complete (includes KEY—AC~AI, AU, AW of Fig—22)	1	BJ25. BJ25L
AU	BX 27501	Frame, commutator end	1	BJ25. BJ25L
AV	BX 27600	Brush holder complete	2	BJ25. BJ25L
AW	A 27503	Oil felt	1	BJ25. BJ25L

VOLTAGE REGULATOR

(FIG. 23)				
	BX 27700	Voltage regulator assembly (includes KEY—A~AB of Fig.—23)	1	BJ25. BJ25L
	BX 27760	Voltage regulator complete (includes KEY—D, F~P, W of Fig.—23)	1	BJ25. BJ25L
	BX 27710	Current regulator complete (includes KEY—D~M, O, P, W of Fig.—23)	1	BJ25. BJ25L
	BX 27770	Cut-out relay complete (includes KEY—A~C, P~V of Fig.—23)	1	BJ25. BJ25L
A	A 277730A	Support arm complete	1	BJ25. BJ25L
B	A 277790A	Upper point complete	1	BJ25. BJ25L
C	BX 277710	Relay coil complete	1	BJ25. BJ25L
D	A 27712	Arm, support	2	BJ25. BJ25L
E	BX 277510	Current coil complete	1	BJ25. BJ25L
F	A 277450A	Upper point holder complete	2	BJ25. BJ25L
G	A 27720	Lower point holder complete	2	BJ25. BJ25L
H	WP 4	Washer, plate	8	
I	WS 4	Washer, spring	14	
J	SF 0410	Biss	14	
K	NHB 06055A	Nut	2	
L	A 27740	Point, upper contact	2	BJ25. BJ25L
M	A 27746	Washer	2	BJ25. BJ25L
N	BX 277610	Voltage coil complete	1	BJ25. BJ25L
O	A 27719B	Spring, armature	2	BJ25. BJ25L

FIG.—23 VOLTAGE REGULATOR

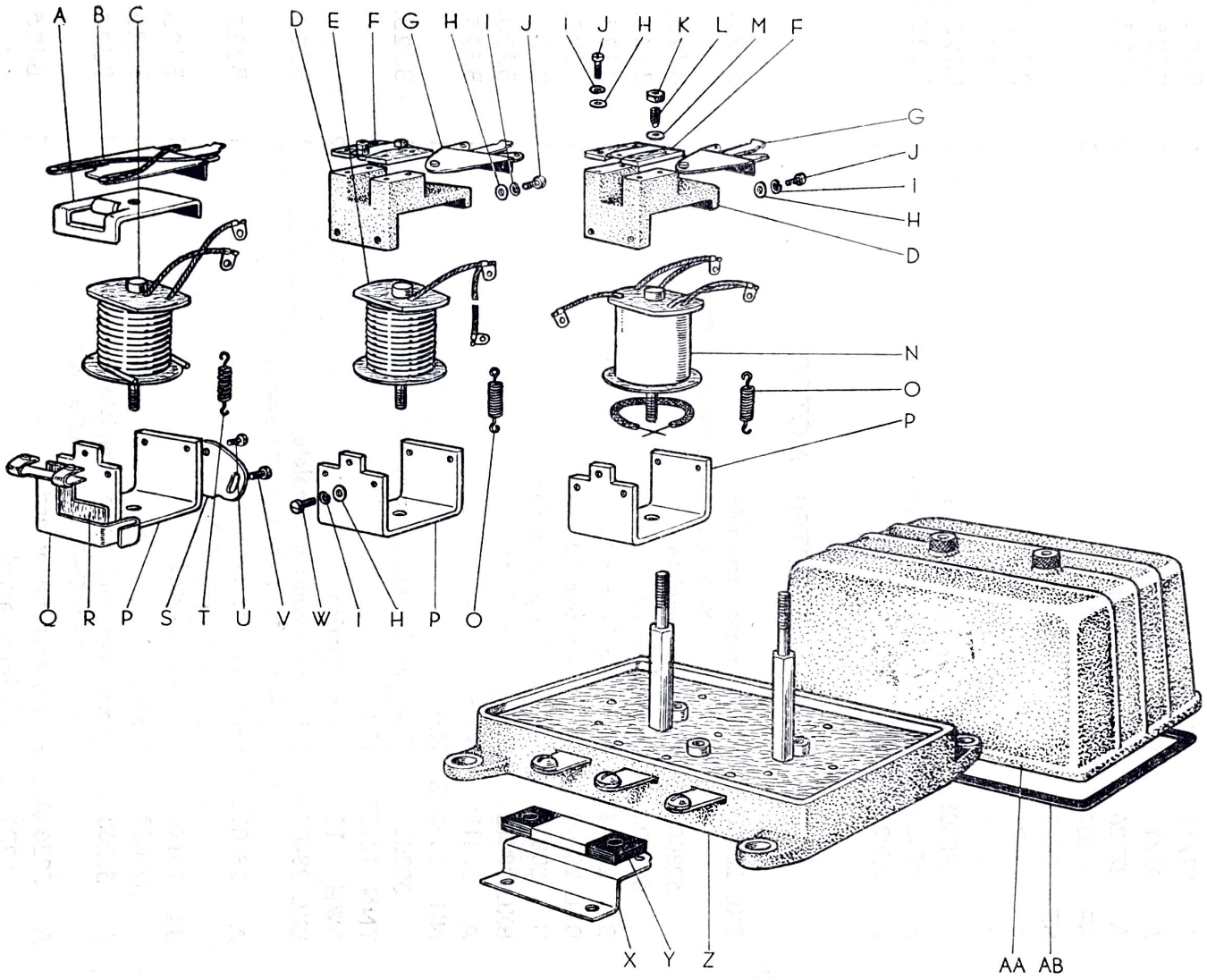

KEY	PART NO.	PART NAME	PER CAR	MODEL
(FIG. 23)				
P	A 27710	Support complete	3	BJ25. BJ25L
Q	A 27780	Lower point complete	1	BJ25. BJ25L
R	A 27779A	Insulator	1	BJ25. BJ25L
S	A 27713	Hanger, spring	3	BJ25. BJ25L
T	A 27719	Spring, armature	1	BJ25. BJ25L
U	A 27726	Screw, eccentric	3	BJ25. BJ25L
V	SF 0407	Biss	3	
W	SF 0408	Biss	6	
X	A 27797	Cover, resistance	1	BJ25. BJ25L
Y	A 27796	Resistance	1	BJ25. BJ25L
Z	A 27830B	Regulator base complete	1	BJ25. BJ25L
AA	A 27832B	Regulator cover complete	1	BJ25. BJ25L
AB	A 27835	Washer, gum	1	BJ25. BJ25L

STARTER MOTOR

(FIG. 24)				
	BXL 28000	Starter motor assembly (includes KEY—A~I, L, N~AI, AK~AP of Fig.—24)	1	BJ25. BJ25L
A	523003	Armature complete	1	BJ25. BJ25L
B	523023	Washer, thrust	1	BJ25. BJ25L
C	S 28744B	Pin, drive lever set	1	BJ25. BJ25L
D	BXL 28740	Drive lever complete	1	BJ25. BJ25L
E	S 28811	Collar, drive lever spring	1	BJ25. BJ25L
F	BXL 28416	Spring, drive lever	1	BJ25. BJ25L
G	A 28418L	Washer	1	BJ25. BJ25L
H	NH 1004FZ	Nut	1	
I	523024	Over running clutch complete	1	BJ25. BJ25L
J	TNN 1210Z	Nut	1	
K	SWH 12	Washer, spring	2	
	BXL 28400	Drive lever housing complete (includes KEY—C~H, L, N of Fig.—24)	1	BJ25. BJ25L
L	A 28401L	Housing, drive lever (includes KEY—N of Fig.—24)	1	BJ25. BJ25L
M	BX 18141	Bolt, starter stud	1	BJ25. BJ25L
N	523060	Bearing	1	BJ25. BJ25L
	A 52263A	Commutator end frame complete (includes KEY—O~T, Y~AD of Fig.—24)	1	BJ25. BJ25L
O	A 52264A	Frame, commutator end	1	BJ25. BJ25L
P	5270	Lead, brush grand	2	BJ25. BJ25L
Q	5267	Spring, brush	4	BJ25. BJ25L
R	5266	Holder, brush	4	BJ25. BJ25L
S	5265	Brush	4	BJ25. BJ25L
T	5271	Wire, brush field connecting lead	1	BJ25. BJ25L
U	A 27013	Screw, cover band	1	BJ25. BJ25L
V	BX 27015	Washer, cover band	1	BJ25. BJ25L

FIG.—24 STARTER MOTOR

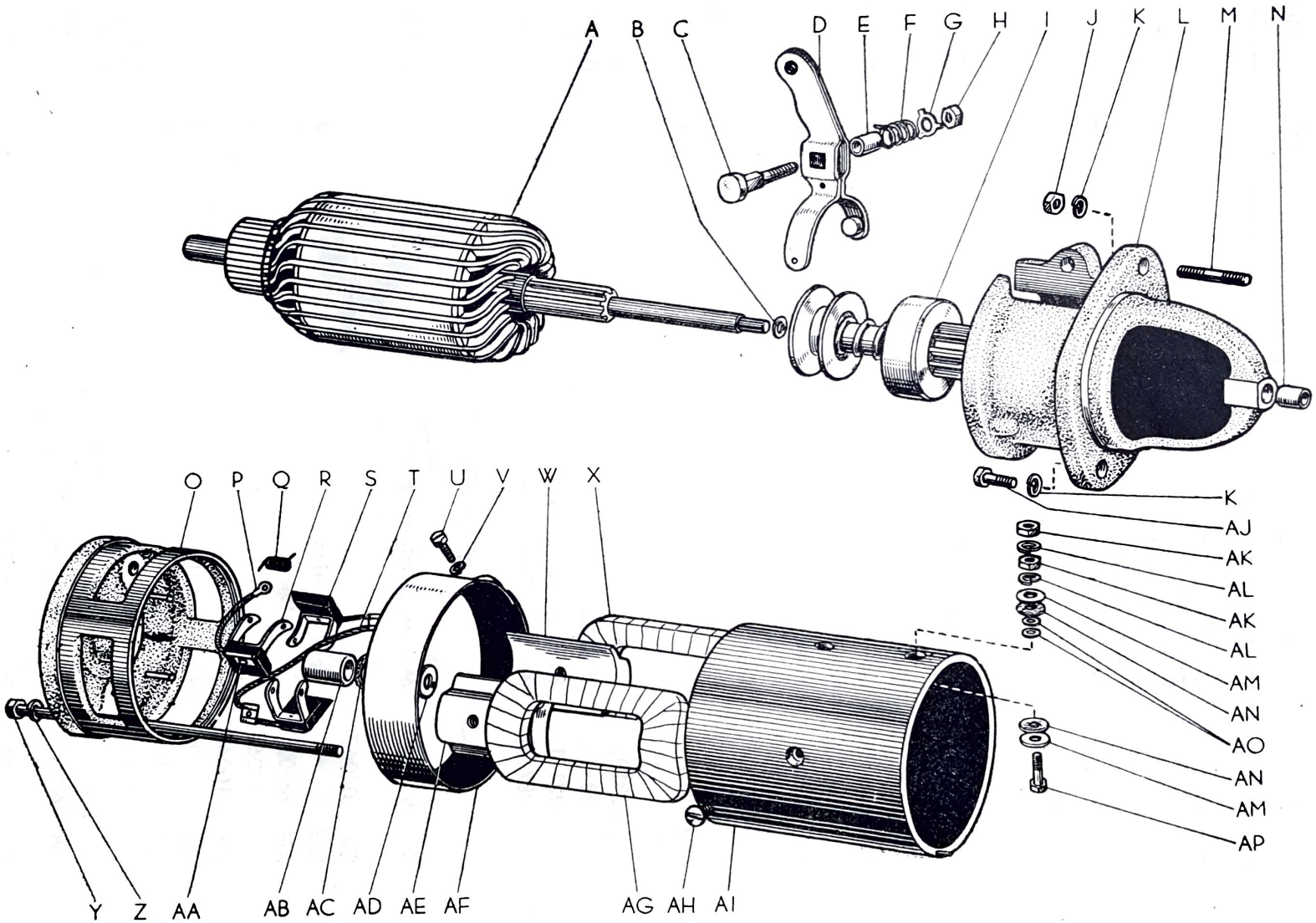

KEY	PART NO.	PART NAME	PER CAR	MODEL
(FIG. 24)			2	BJ25. BJ25L
W	52247	Core, pole	1	BJ25. BJ25L
X	A 28120L	Coil, field L.H.	2	BJ25. BJ25L
Y	A 28005	Bolt, through	4	
Z	WS 6	Washer, spring	4	
AA	SR 03.512	Biss	1	BJ25. BJ25L
AB	5261	Bush, bearing	1	BJ25. BJ25L
AC	523022A	Washer, thrust leather	1	BJ25. BJ25L
AD	523022B	Washer, thrust	2	BJ25. BJ25L
AE	52248	Core, pole (A)	1	BJ25. BJ25L
AF	A 27010C	Cover band complete	1	BJ25. BJ25L
AG	A 28110L	Coil, field R.H.	4	
AH	SP 1015.5Z	Screw, pole core stop	1	BJ25. BJ25L
	A 28100L	Yoke complete (includes KEY—W, X, AE~AI, AK~AP of Fig.—24)	1	BJ25. BJ25L
AI	A 28101L	Yoke	1	BJ25. BJ25L
AJ	YBN 1225Z	Bolt	2	
AK	NH 1004F	Nut	2	
AL	WS 10	Washer, spring	2	BJ25. BJ25L
AM	523109	Washer, terminal	2	BJ25. BJ25L
AN	523110	Washer, insulation	2	BJ25. BJ25L
AO	523111	Bush, insulation	1	BJ25. BJ25L
AP	S 28712B	Bolt, terminal		

MAGNET SWITCH

(FIG. 25)				
	RH 28800A	Magnet switch assembly (includes KEY—A~AP of Fig.—25)	1	BJ25. BJ25L
A	SF 0406Z	Biss	3	
B	WS 4	Washer, spring	3	
C	RH 28802	Cover, lower	1	BJ25. BJ25L
D	nH 1006FZ	Nut	2	
E	nH 1004FZ	Nut	2	
F	WS 10	Washer, spring	4	
G	WP 10	Washer, plate	3	
H	RH 28847	Plate, insulation	1	BJ25. BJ25L
I	523224	Washer, terminal insulation	4	BJ25. BJ25L
	RH 28900B	Relay complete (includes KEY—J~L of Fig.—25)	1	BJ25. BJ25L
J	BY 58850	Spring, armature	1	BJ25. BJ25L
K	BY 58831	Plate, armature	1	BJ25. BJ25L
L	BY 58810	Coil complete	1	BJ25. BJ25L
M	RH 28841	Holder, terminal	1	BJ25. BJ25L
N	RH 28801	Cover, magnet switch upper	1	BJ25. BJ25L
O	RH 28856	Washer	1	BJ25. BJ25L
P	RH 28842	Bolt, terminal	2	BJ25. BJ25L

FIG.—25 MAGNET SWITCH

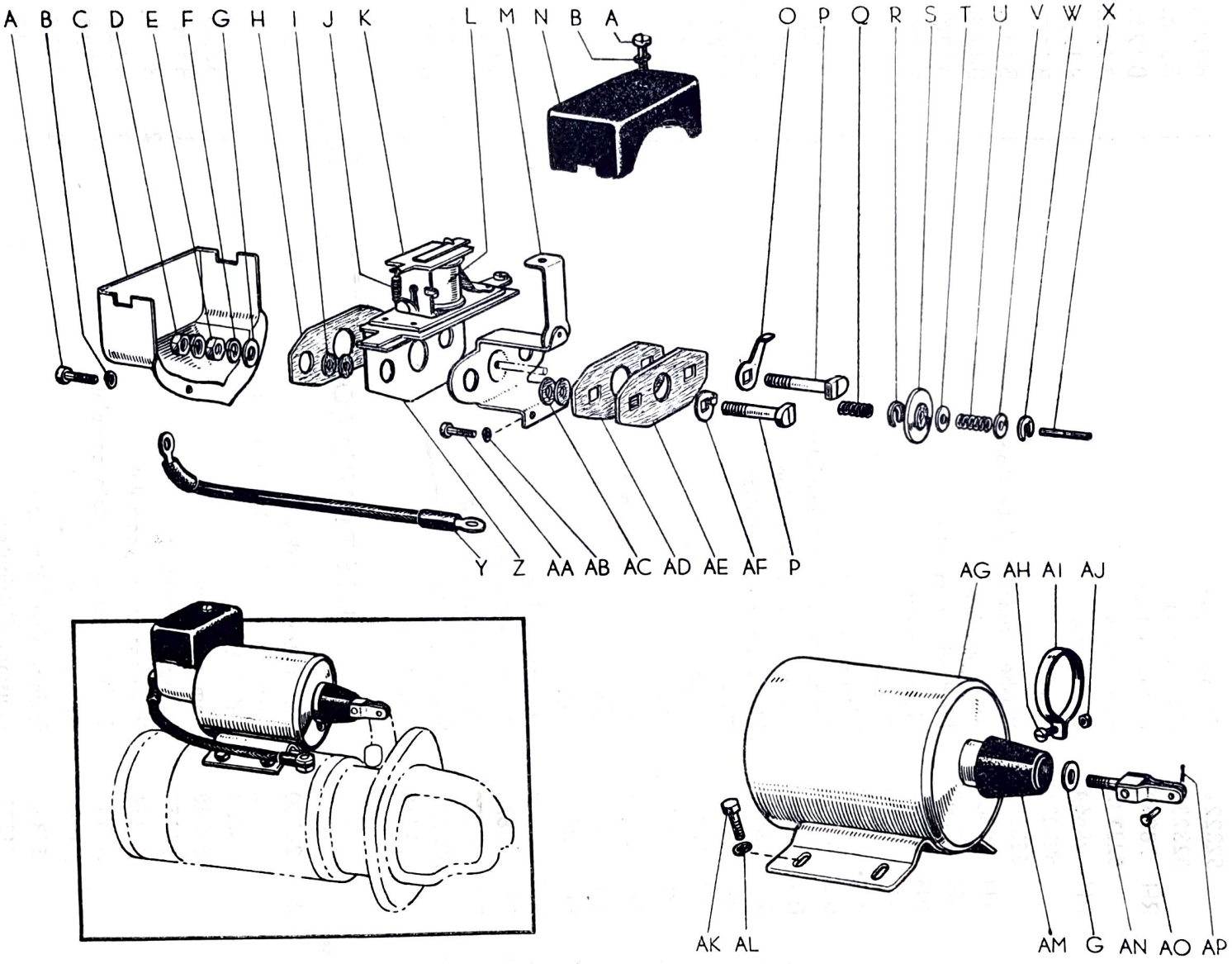

KEY	PART NO.	PART NAME	PER CAR	MODEL
(FIG. 25)			1	BJ25. BJ25L
Q	523222	Spring, upper	1	BJ25. BJ25L
R	523236	Base, spring	1	BJ25. BJ25L
S	RH 28862	Plate, contact	1	BJ25. BJ25L
T	523237	Base, spring	1	BJ25. BJ25L
U	RH 28864	Spring, lower	1	BJ25. BJ25L
V	523234	Washer	1	BJ25. BJ25L
W	523228	Washer, contact plate stop	1	BJ25. BJ25L
X	RH 28861	Stud, moving	1	BJ25. BJ25L
Y	RH 28760	Lead wire complete	1	BJ25. BJ25L
Z	RH 28941	Holder, relay	2	
AA	SF 0508	Screw	2	
AB	WS 5	Washer, spring	6	BJ25. BJ25L
AC	RH 28848	Bush, terminal bolt insulation	1	BJ25. BJ25L
AD	RH 28845	Plate, terminal insulation	1	BJ25. BJ25L
AE	RH 28859	Plate, terminal insulation	1	BJ25. BJ25L
AF	RH 28851	Terminal	1	BJ25. BJ25L
AG	RH 28805	Housing complete	1	
AH	SF 0412Z	Biss	1	BJ25. BJ25L
AI	RH 28881	Plate, moving core cover	1	
AJ	nH 0404Z	Nut	4	
AK	BH 0610	Bolt	4	
AL	WS 6	Washer, spring	1	BJ25. BJ25L
AM	RH 28873	Cover, moving core	1	BJ25. BJ25L
AN	RH 28872	Bolt, moving core setting	1	BJ25. BJ25L
AO	523253	Pin, connecting	1	
AP	PO 1612	Pin, cotter		

DISTRIBUTOR

(FIG. 26)	A 29100	Distributor assembly (includes KEY—A~AC of Fig.—26)	1	BJ25. BJ25L
A	54353	Oil felt	1	BJ25. BJ25L
B	54348	Cam complete	1	BJ25. BJ25L
C	54357	Spring, governor	2	BJ25. BJ25L
D	54354A	Governor weight complete	2	BJ25. BJ25L
E	54362	Shaft & governor plate complete	1	BJ25. BJ25L
F	54368	Washer, thrust	2	BJ25. BJ25L
G	54343	Spring, distributor cap	2	BJ25. BJ25L
H	54373	Housing, distributor	1	BJ25. BJ25L
I	54374B	Grease cup complete	1	BJ25. BJ25L
J	54372	Pin, spiral gear	1	BJ25. BJ25L
K	54371C	Gear, spiral	1	BJ25. BJ25L
L	NH 0403	Nut	5	
M	WS 4	Washer, spring	6	
N	WP 4Z	Washer, terminal	1	

FIG.—26 DISTRIBUTOR

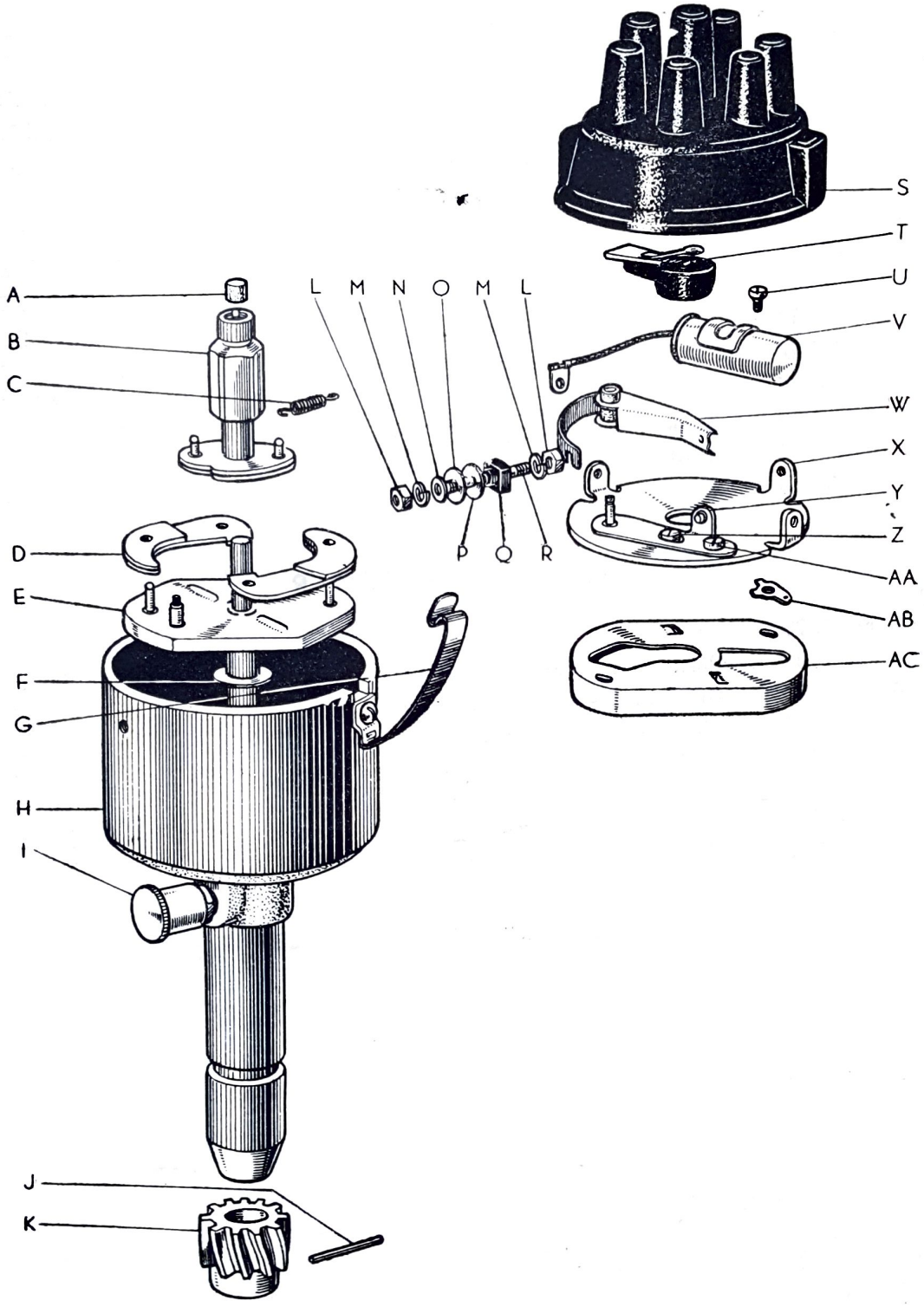

KEY	PART NO.	PART NAME	PER CAR	MODEL
(FIG. 26)				
O	54341A	Washer, terminal insulation	1	BJ25. BJ25L
P	54341B	Washer, terminal insulation	1	BJ25. BJ25L
Q	54340	Bush, terminal stud insulation	1	BJ25. BJ25L
R	54345	Bolt, terminal	1	BJ25. BJ25L
S	54303	Distributor cap complete	1	BJ25. BJ25L
T	54309	Rotor, distributor	1	BJ25. BJ25L
U	SF 0404	Biss	1	BJ25. BJ25L
V	54337	Condenser complete	1	BJ25. BJ25L
W	54317	Breaker arm complete	1	BJ25. BJ25L
X	54332	Breaker plate complete	1	BJ25. BJ25L
Y	54327	Contact point complete	1	BJ25. BJ25L
Z	54335	Adjuster, point	1	BJ25. BJ25L
AA	54336	Screw, point setting	1	BJ25. BJ25L
AB	54359	Washer, cover lock	1	BJ25. BJ25L
AC	54358	Cover, weight stop	1	BJ25. BJ25L

VACUUM CONTROLLER

(FIG. 27)				
A	TBN 0820	Bolt	1	
B	B 18381	Piece, vacuum control set	1	BJ25. BJ25L
C	F 29400	Distributor vacuum control assembly	1	BJ25. BJ25L
D	1749	Plug, oil gauge coupling	2	BJ25. BJ25L
	BQ 18601	Carburetor vacuum control pipe complete (includes KEY—D, E of Fig.—27)	1	BJ25. BJ25L
E	BQ 18611	Pipe, carburetor vacuum control	1	BJ25. BJ25L
F	1748	Nipple, oil gauge pipe union	1	BJ25. BJ25L

FIG.—27 VACUUM CONTROLLER

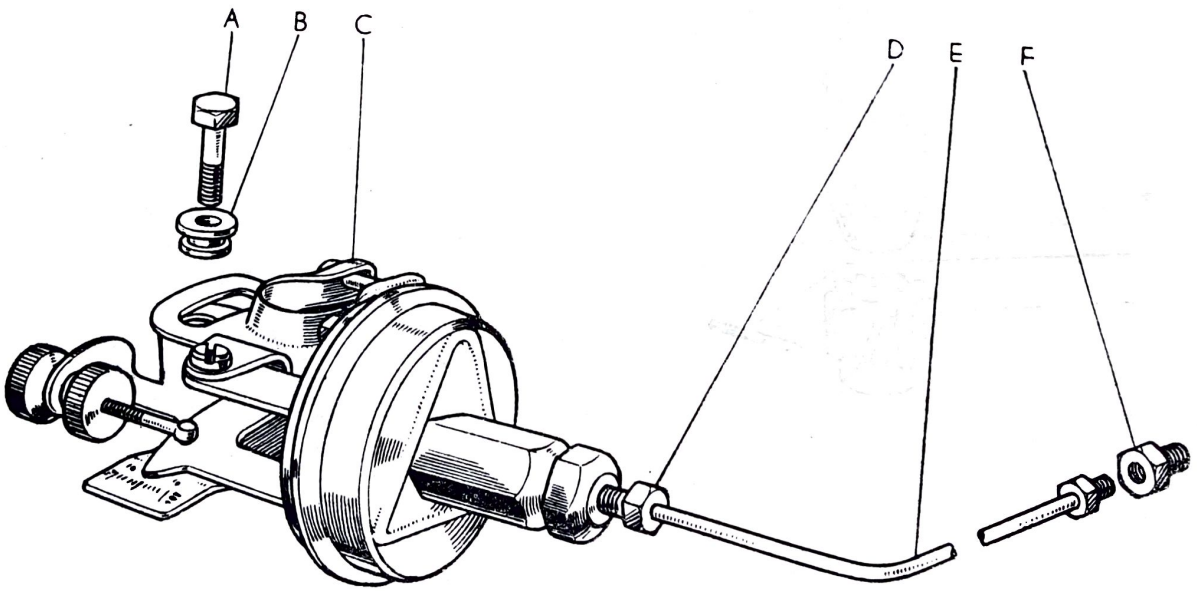

CHASSIS GROUP

FIG.—28 CLUTCH

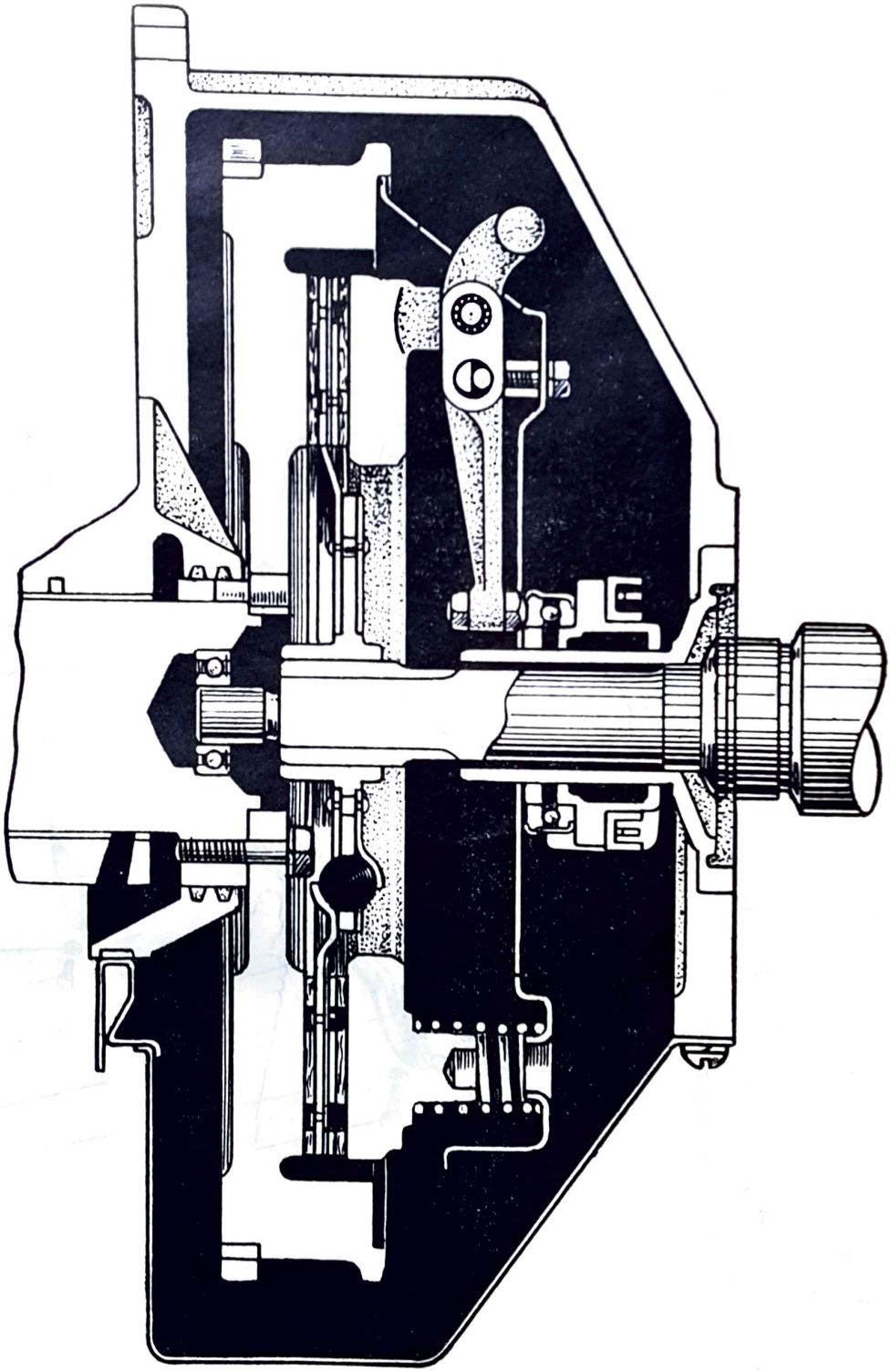

FIG.—29 CLUTCH & FORK

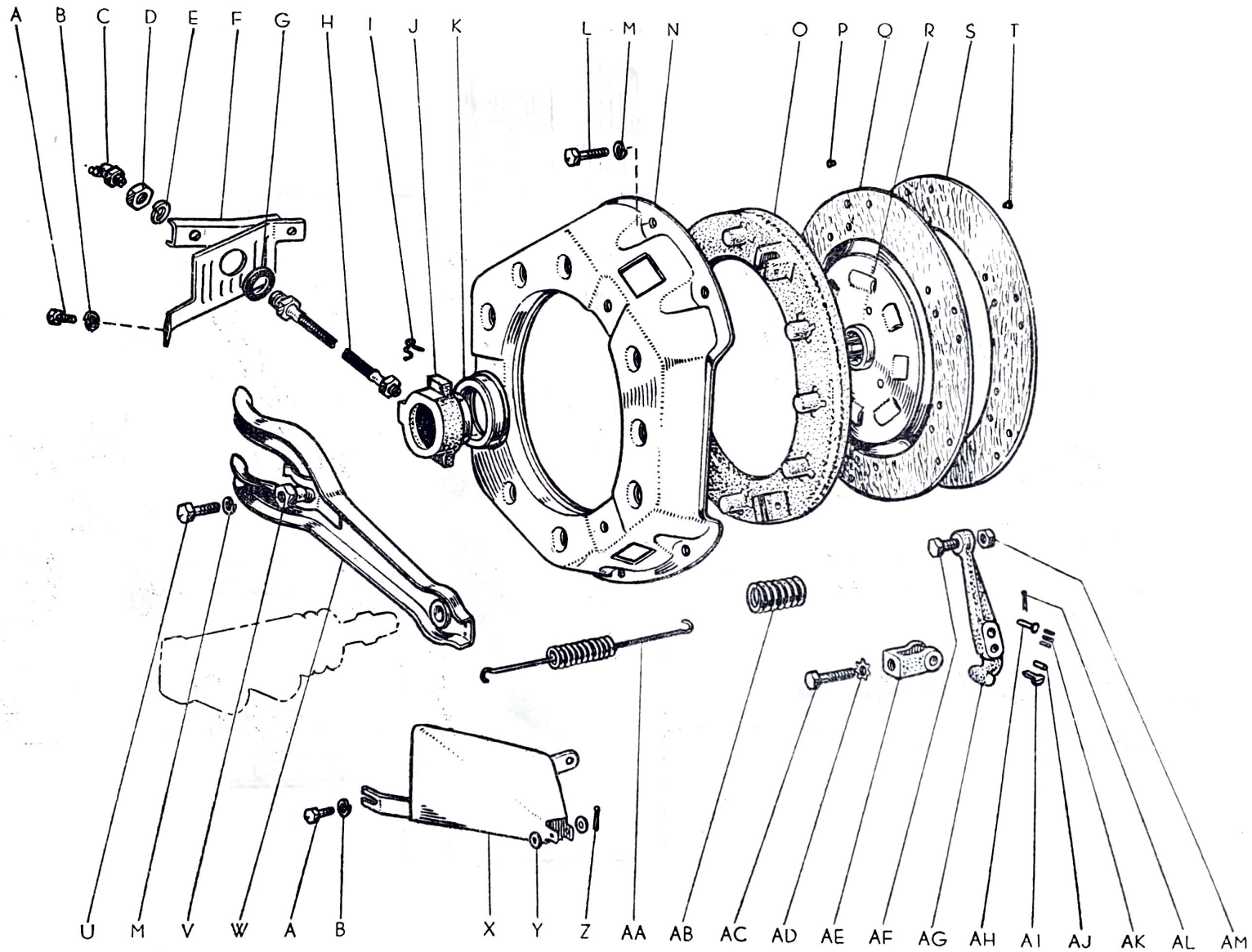

KEY	PART NO.	PART NAME	PER CAR	MODEL
		CLUTCH & FORK		
(FIG. 29)				
A	JBN 0612TZ	Bolt	4	
B	SWH 06	Washer, spring	4	
C	43119	Nipple, 67.5° bent grease	1	BJ25. BJ25L
D	LNN 1405T	Nut	1	
E	SWL 14	Washer, Spring	1	
F	BX 31102	Clutch housing cover plate complete	1	BJ25. BJ25L
G	BX 31135	Plate gum, clutch housing cover	1	BJ25. BJ25L
H	BX 31301	Clutch release bearing hub grease pipe complete	1	BJ25. BJ25L
I	BX 31312	Spring, clutch release bearing hub	2	BJ25. BJ25L
	BX 31210	Clutch release bearing hub assembly (includes KEY—I~K of Fig.—29)	1	BJ25. BJ25L
	BX 31201	Clutch release bearing hub complete (includes KEY—I, J of Fig.—29)	1	BJ25. BJ25L
J	BX 31311	Hub, clutch release bearing	1	BJ25. BJ25L
K	KB 3137	Bearing, clutch throughout	1	BJ25. BJ25L
L	TBK 0815	Bolt	6	
M	SWH 08	Washer, spring	7	
N	KB 3101	Cover, clutch	1	BJ25. BJ25L
	BJ 31010	Clutch pressure plate assembly (includes KEY—N, O, AB~AM of Fig.—29)	1	BJ25. BJ25L
O	BX 31212	Plate, clutch pressure	1	BJ25. BJ25L
P	KB 3134	Rivet, clutch facing (long)	12	BJ25. BJ25L
Q	FA 31240	Clutch disc assembly (includes KEY—P, R~T of Fig.—29)	1	BJ25. BJ25L
R	FA 31202	Clutch torsion rubber complete	8	BJ25. BJ25L
S	KB 3131	Facing, clutch	2	BJ25. BJ25L
T	KB 3135	Rivet, clutch facing (short)	12	BJ25. BJ25L
U	TBN 0825	Bolt	1	
V	BX 31334	Ball, clutch fork	1	BJ25. BJ25L
W	BX 31302	Clutch fork complete	1	BJ25. BJ25L
X	BX 31101	Fork hole leather cover complete	1	BJ25. BJ25L
Y	PWL 0635	Washer, plate	2	
Z	WP 3018	Pin, cotter	1	
AA	RS 31316	Spring, clutch release fork back	1	BJ25. BJ25L
AB	3117	Spring, clutch	6	BJ25. BJ25L
AC	TBK 1012T	Bolt	3	
AD	1435	Washer, flywheel bolt	3	BJ25. BJ25L
AE	KB 3111	Yoke, clutch pressure lever pin	3	BJ25. BJ25L
AF	BX 31215	Bolt, clutch pressure lever adjust	3	BJ25. BJ25L
AG	BX 31213	Lever, clutch pressure	3	BJ25. BJ25L
AH	KB 3120	Pin, clutch pressure plate	3	BJ25. BJ25L
AI	KB 3112	Pin, clutch pressure lever	3	BJ25. BJ25L

KEY	PART NO.	PART NAME	PER CAR	MODEL
(FIG. 29)				
AJ	KB 3114	Roller, clutch pressure lever	3	BJ25. BJ25L
AK	KB 3119	Roller, clutch pressure lever pin	45	BJ25. BJ25L
AL	WP 2012	Pin, cotter	6	
AM	LNN 0805	Nut	3	

CLUTCH, BRAKE PEDAL & RELEASE CYLINDER

(FIG. 30)				
A	BJ25 53306	Pedal bracket complete	1	BJ25
	BJ25L53306	Pedal bracket complete	1	BJ25L
B	LNN 0805	Nut	2	
C	TBN 0835T	Bolt	2	
D	SWH 12	Washer, spring	2	
E	TNN 1210	Nut	2	
F	2BJ 31417	Rod, master cylinder push	2	BJ25. BJ25L
G	2BJ 47101	Brake pedal complete (includes KEY—K of Fig.—30)	1	BJ25. BJ25L
H	2BJ 31416	Pin, master cylinder push rod	2	BJ25. BJ25L
I	RK 26251	Spring, accel link tension	2	BJ25. BJ25L
J	2BJ 31415	Shaft, pedal	2	BJ25. BJ25L
K	2BJ 31413	Bush, pedal	2	BJ25. BJ25L
L	LNN 1206	Nut	2	
M	PWL 0010	Washer, plate	1	
N	BX 46239	Washer, mission brake cam pin coil spring	2	BJ25. BJ25L
O	PWL 2508	Washer, plate	2	
P	SWH 08	Washer, spring	2	
Q	TNN 0806	Nut	2	
	2BJ 31405	Clutch release pipe complete (includes KEY—R, S of Fig.—30)	1	BJ25
	BJ25L31405	Clutch release pipe complete	1	BJ25L
R	2BJ 31427	Pipe, clutch release	1	BJ25
	BJ25L31427	Pipe, clutch release	1	BJ25L
	BJ25L31428	Room, clutch release pipe	1	BJ25L
S	44356	Nut, oil brake pipe union (6.5mm)	2	BJ25. BJ25L
T	RS 31473	Clip, flexible hose	1	BJ25. BJ25L
U	2BJ 31471	Plate, clutch release union pipe set	1	BJ25. BJ25L
V	SKB 47203	Hose, rear oil brake flexible	1	BJ25. BJ25L
W	2BJ 31317	Hanger, clutch release fork back spring	1	BJ25. BJ25L
X	SWH 10	Washer, spring	2	
Y	TBN 1055	Bolt	2	
Z	2BJ 31401	Clutch pedal complete (includes KEY—K of Fig.—30)	1	BJ25. BJ25L
AA	44134	Seat, brake & clutch pedal	2	BJ25. BJ25L
AB	RS 31491	Cap, bleeder plug rubber	1	BJ25. BJ25L
AC	RK 47584	Plug, wheel cylinder bleeder	1	BJ25. BJ25L
AD	RS 31488	Packing, union	1	BJ25. BJ25L
	2BJ 31420	Clutch release cylinder assembly (includes KEY—AB, AC, AE~AK of Fig.—30)	1	BJ25. BJ25L

FIG.—30 CLUTCH, BRAKE PEDAL & RELEASE CYLINDER

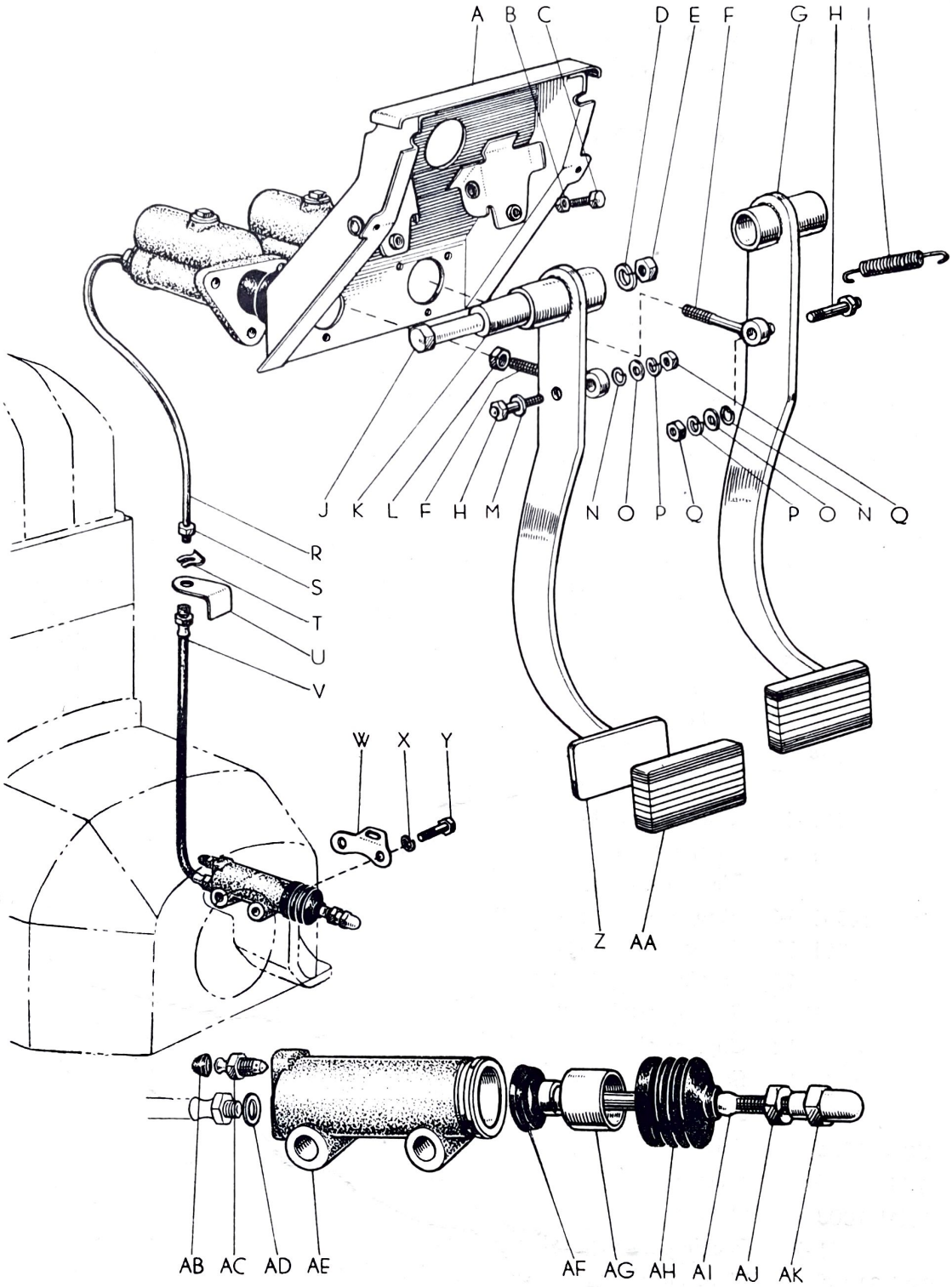

KEY	PART NO.	PART NAME	PER CAR	MODEL
(FIG. 30)				
AE	2BJ 31481	Cylinder, clutch release	1	BJ25. BJ25L
AF	2BJ 31483	Cup, clutch release cylinder piston	1	BJ25. BJ25L
AG	2BJ 31482	Piston, clutch release cylinder	1	BJ25. BJ25L
AH	2BJ 31485	Boot, clutch release cylinder	1	BJ25. BJ25L
AI	2BJ 31484	Rod, clutch release cylinder piston	1	BJ25. BJ25L
AJ	LNN 1006	Nut	1	
AK	2BJ 31486	Adjuster, clutch release cylinder piston rod	1	BJ25. BJ25L

MASTER CYLINDER

(FIG. 31)				
	2BJ 31410	Clutch master cylinder assembly (includes KEY—A~S, W, X of Fig.—31)	1	BJ25. BJ25L
	44351	Oil brake master cylinder assembly (includes KEY—A~S, W, Y~AC of Fig.—31)	1	BJ25. BJ25L
A	SB 47105	Master cylinder piston rod complete	2	BJ25. BJ25L
B	44351-21	Ring, master cylinder boot snap (small)	2	BJ25. BJ25L
C	44351-19	Boot, master cylinder	2	BJ25. BJ25L
D	44351-20	Ring, master cylinder boot snap (large)	2	BJ25. BJ25L
E	44351-8	Seat, master cylinder outlet valve	2	BJ25. BJ25L
F	44351-9	Valve, master cylinder outlet	2	BJ25. BJ25L
G	44351-10	Packing, master cylinder outlet valve seat	2	BJ25. BJ25L
H	KB 4054	Master cylinder cap complete	2	BJ25. BJ25L
I	44351-5	Packing, master cylinder cap	2	BJ25. BJ25L
J	44351-1	Cylinder, master	2	BJ25. BJ25L
K	44351-2	Plug, master cylinder plate	2	BJ25. BJ25L
L	44351-17	Ring, master cylinder piston stop	2	BJ25. BJ25L
M	44351-16	Stop, master cylinder piston	2	BJ25. BJ25L
N	44351-11	Piston, master cylinder	2	BJ25. BJ25L
O	44351-15	Packing, master cylinder piston	2	BJ25. BJ25L
P	44351-25	Spacer, master cylinder piston cup	2	BJ25. BJ25L
Q	44351-12	Cup, master cylinder piston	2	BJ25. BJ25L
R	44351-14	Seat, master cylinder return spring	2	BJ25. BJ25L
S	44351-13	Spring, master cylinder return	2	BJ25. BJ25L
T	TBN 1035	Bolt	2	BJ25. BJ25L
U	SWH 10	Washer, spring	6	
V	TNN 1008	Nut	6	
W	44351-7	Packing, master cylinder plug	6	
X	2BJ 31465	Plug, clutch master cylinder (Clutch only)	2	BJ25. BJ25L
Y	44351-6	Plug, master cylinder (Brake only)	1	BJ25. BJ25L
Z	44347-10	Packing, rear wheel cylinder union bolt (Brake only)	1	BJ25. BJ25L
AA	44351-23	Connection, master cylinder tube (Brake only)	1	BJ25. BJ25L
AB	44324-10	Packing, rear wheel cylinder union bolt seat (Brake only)	1	BJ25. BJ25L
AC	44351-24	Screw, stop light switch (Brake only)	1	BJ25. BJ25L

FIG.—31 MASTER CYLINDER

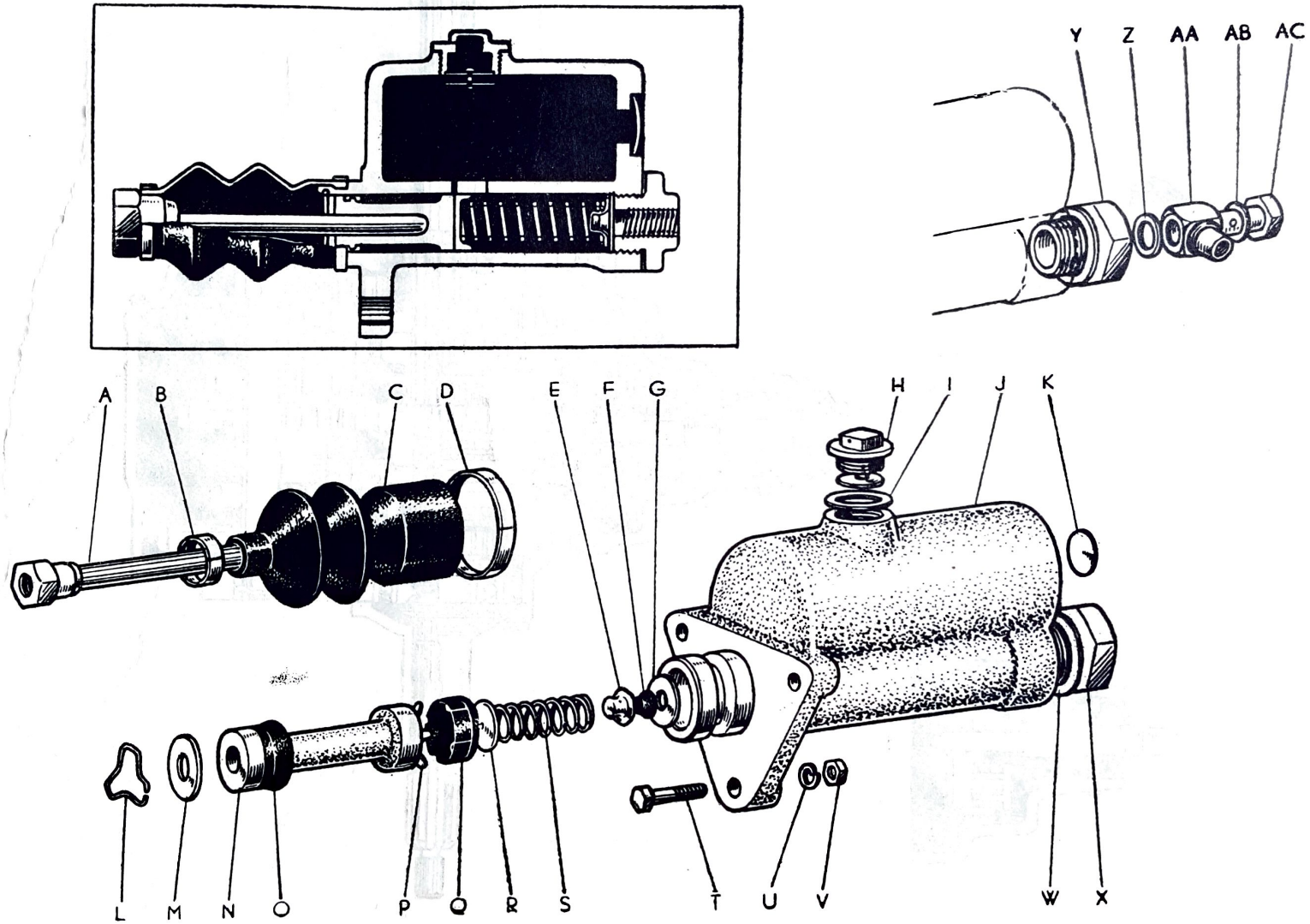

FIG.—32 TRANSMISSION

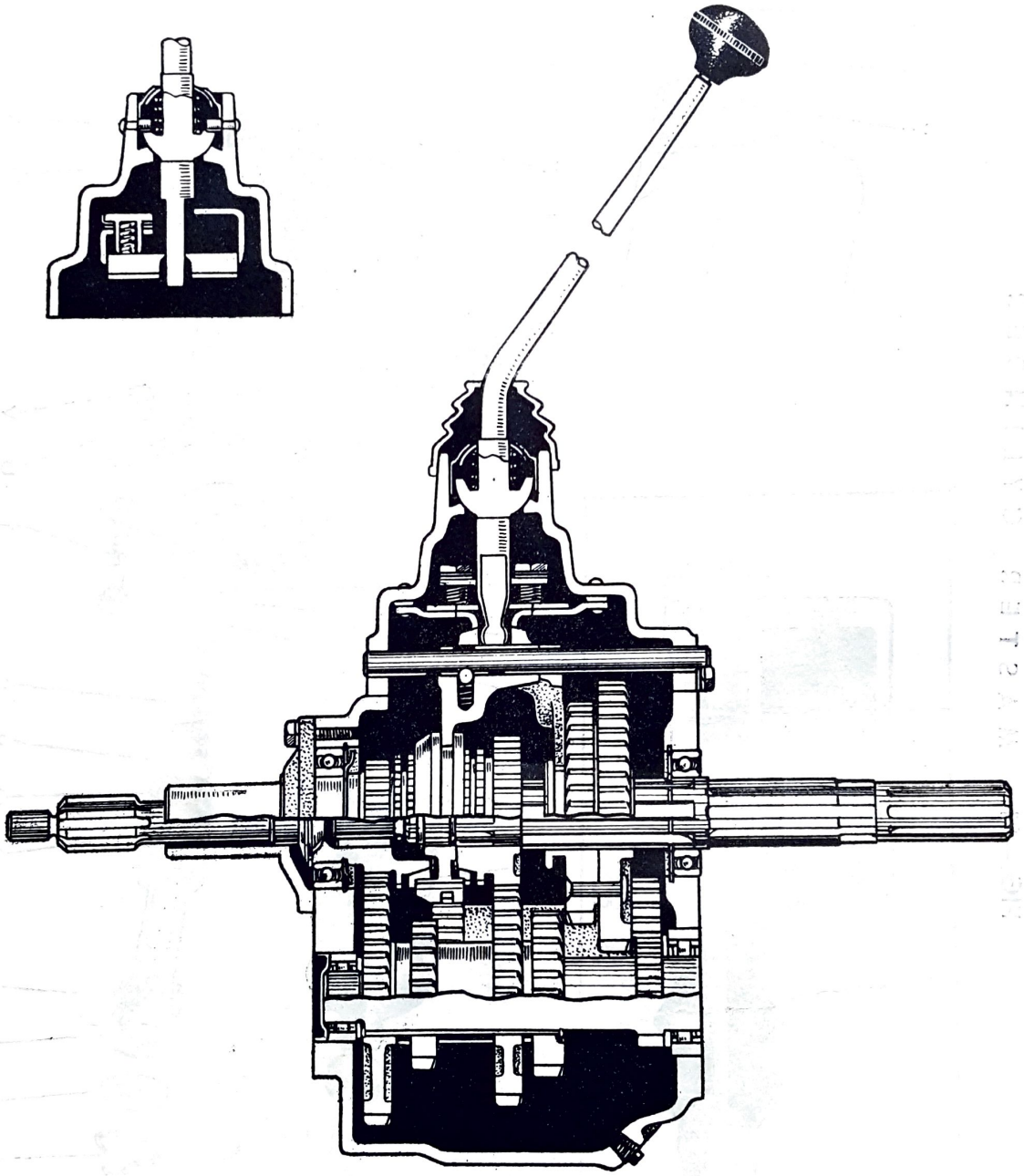

KEY	PART NO.	PART NAME	PER CAR	MODEL

TRANSMISSION

	2BJ 33000	Transmission assembly with transfer & center brake (includes KEY—A~N, P~AM of Fig.—33 and KEY—A~AO, of Fig.—34 and KEY—A~R, V~AO of Fig.—36 an dKEY—A~R, V~AQ of Fig.—37 and KEY—A~AF of Fig.—38)	1	BJ25
	BJ25L33000	Transmission assembly with transfer & center brake	1	BJ25L
	2BJ 33100	Transmission assembly (includes KEY—A~N, P~AM of Fig.—33 and KEY—A~AO of Fig—34)	1	BJ25. BJ25L

TRANSMISSION CASE, COVER, GEAR SHIFT LEVER & SHIFT FORK

(FIG. 33)

	2BJ 33510	Gear shift lever assembly (includes KEY—A~E of Fig.—33)	1	BJ25. BJ25L
A	2BJ 33502	Gear shift lever knob complete	1	BJ25. BJ25L
B	2BJ 33511	Lever, gear shift	1	BJ25. BJ25L
C	32103	Cap, gear shift lever	1	BJ25. BJ25L
D	32104	Seat, gear shift lever spring	1	BJ25. BJ25L
E	BM 33528	Spring, gear shift lever	1	BJ25. BJ25L
F	SG 33523	Latch, transmission inter-lock plate	2	BJ25. BJ25L
G	SG 33525	Washer, transmission inter-lock plate latch	1	BJ25. BJ25L
H	SG 33526	Plate, transmission inter-lock plate latch	1	BJ25. BJ25L
I	SG 33524	Spring, transmission inter-lock plate latch	2	BJ25. BJ25L
J	3242	Ball, gear shift fork lock	5	BJ25. BJ25L
K	2BJ 33214	Spring, gear shift fork lock ball	3	BJ25. BJ25L
L	2BJ 33217	Shaft, gear shifting reverse speed	1	BJ25. BJ25L
M	2BJ 33213	Fork, reverse speed	1	BJ25. BJ25L
N	FA 33531	Cover, gear shift lever cap	1	BJ25. BJ25L
O	BX 53417	Cover gum, mission	1	BJ25. BJ25L
P	BX 33163	Knock, gear shift lever cap	2	BJ25. BJ25L
Q	YBN 1030	Bolt	6	
R	SWH 10	Washer, spring	12	
	2BJ 33160	Transmission case cover assembly (includes KEY—A~N, P, S, U~AC of Fig.—33)	1	BJ25. BJ25L
	2BJ 33103	Transmissin case cover complete (includes KEY—P, S of Fig.—33)	1	BJ25. BJ25L
S	2BJ 33161	Cover, transmission case	1	BJ25. BJ25L
T	3297	Packing, transmission case cover	1	BJ25. BJ25L
U	2BJ 33167	Plate, transmission inter-lock	1	BJ25. BJ25L
	2BJ 33503	Transmission inter-lock plate cover complete (includes KEY—F~J, U, V of Fig.—33)	1	BJ25. BJ25L
V	2BJ 33166	Cover, transmission inter-lock plate	1	BJ25. BJ25L

FIG. 33 TRANSMISSION CASE & COVER

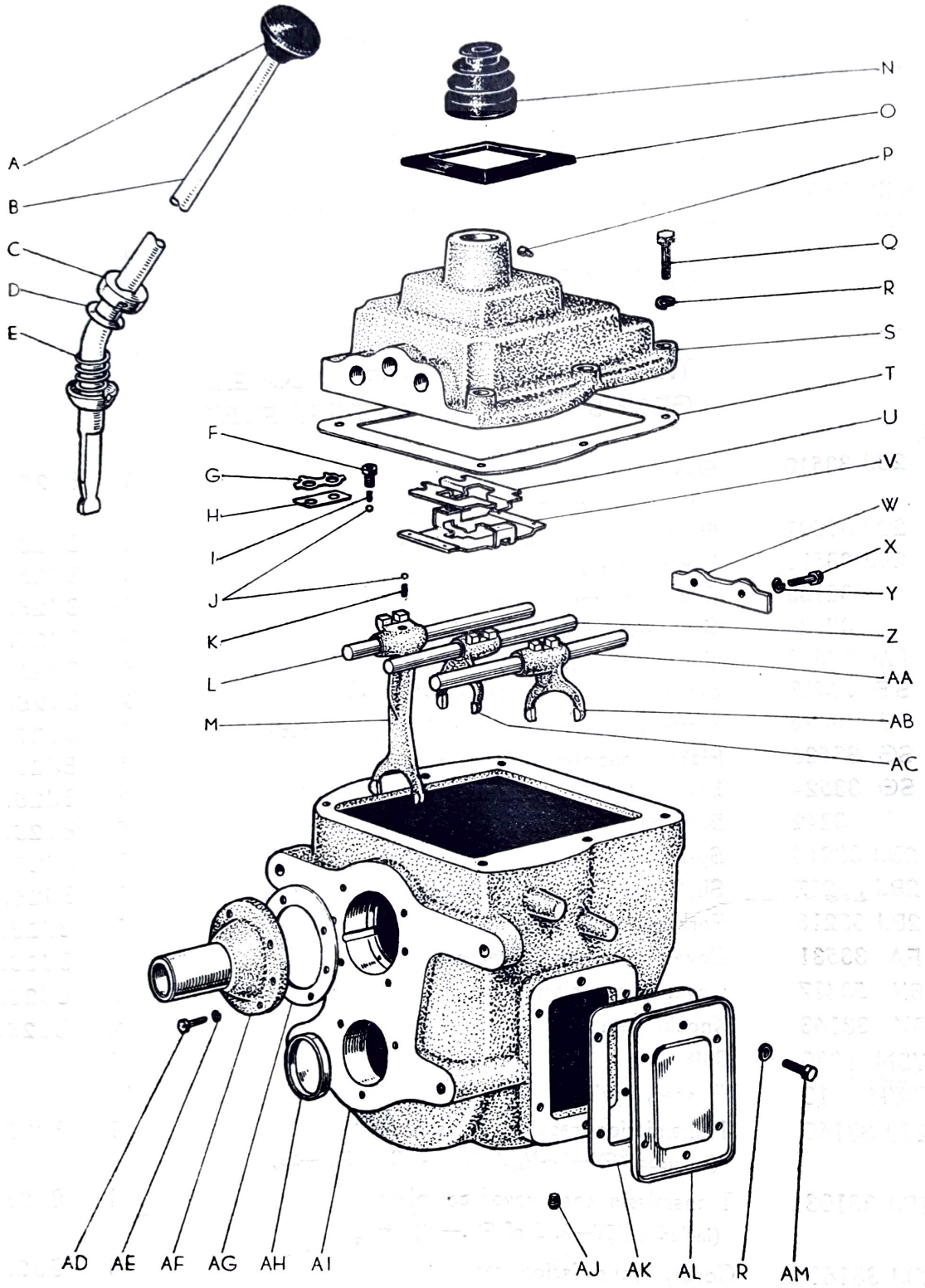

KEY	PART NO.	PART NAME	PER CAR	MODEL
(FIG. 33)				
W	3285	Retainer, gear shifting shaft	1	BJ25. BJ25L
X	TBN 0820	Bolt	2	
Y	SWH 08	Washer, spring	2	
Z	2BJ 33216	Shaft, gear shifting low speed	1	BJ25. BJ25L
AA	2BJ 33215	Shaft, gear shifting high speed	1	BJ25. BJ25L
AB	2BJ 33211	Fork, top & third speed	1	BJ25. BJ25L
AC	2BJ 33212	Fork, low & second speed	1	BJ25. BJ25L
AD	JBN 0620	Bolt	6	
AE	SWH 06	Washer, spring	6	
AF	KB 3136	Lock, transmission front bearing	1	BJ25. BJ25L
AG	3229	Packing, transmission front bearing lock	1	BJ25. BJ25L
AH	3286	Lock, counter shaft bearing	1	BJ25. BJ25L
AI	2BJ 33111	Case, transmission	1	BJ25. BJ25L
AJ	32127	Plug, transmission case oil	2	BJ25. BJ25L
AK	3296	Packing, transmission power-take-off cover	1	BJ25. BJ25L
AL	3295	Cover, transmission power-take-off	1	BJ25. BJ25L
AM	YBN 1015	Bolt	6	

TRANSMISSION GEAR

(FIG. 34)				
A	32115	Lock, main drive gear rear bearing	1	BJ25. BJ25L
B	3280	Bearing, main drive gear	1	BJ25. BJ25L
C	32109	Ring, main drive gear rear bearing snap	1	BJ25. BJ25L
D	3294	Deflector, main drive gear oil	1	BJ25. BJ25L
E	2BJ 33311	Gear, main drive	1	BJ25. BJ25L
F	2BJ 33337	Ring, needle roller service	1	BJ25. BJ25L
G	FA 33365	Ring, top speed synchronizer	1	BJ25. BJ25L
H	FA 33332	Roller, spline shaft needle	18	BJ25. BJ25L
I	2BJ 33333	Spacer, pilot bearing	1	BJ25. BJ25L
J	FA 33362	Spring, synchromesh shifting key	2	BJ25. BJ25L
K	FA 33363	Key, synchromesh shifting	3	BJ25. BJ25L
L	FA 33368	Ring, spline shaft snap } use either one	1	BJ25. BJ25L
	FA 33369	Ring, spline shaft snap }		
M	FA 33361	Hub, third & top speed clutch	1	BJ25. BJ25L
N	2BJ 33335	Bush, third speed gear	1	BJ25. BJ25L
O	FA 33364	Sleeve, clutch hub	1	BJ25. BJ25L
P	FA 33366	Ring, third speed synchronizer	1	BJ25. BJ25L
	2BJ 33301	Third speed gear complete (includes KEY—N, Q of Fig.—34)	1	BJ25. BJ25L
Q	2BJ 33354	Gear, third speed	1	BJ25. BJ25L
	2BJ 33302	Second speed gear complete (includes KEY—R~T of Fig.—34)	1	BJ25. BJ25L
R	2BJ 33352	Gear, second speed	1	BJ25. BJ25L

FIG.—34 TRANSMISSION GEAR

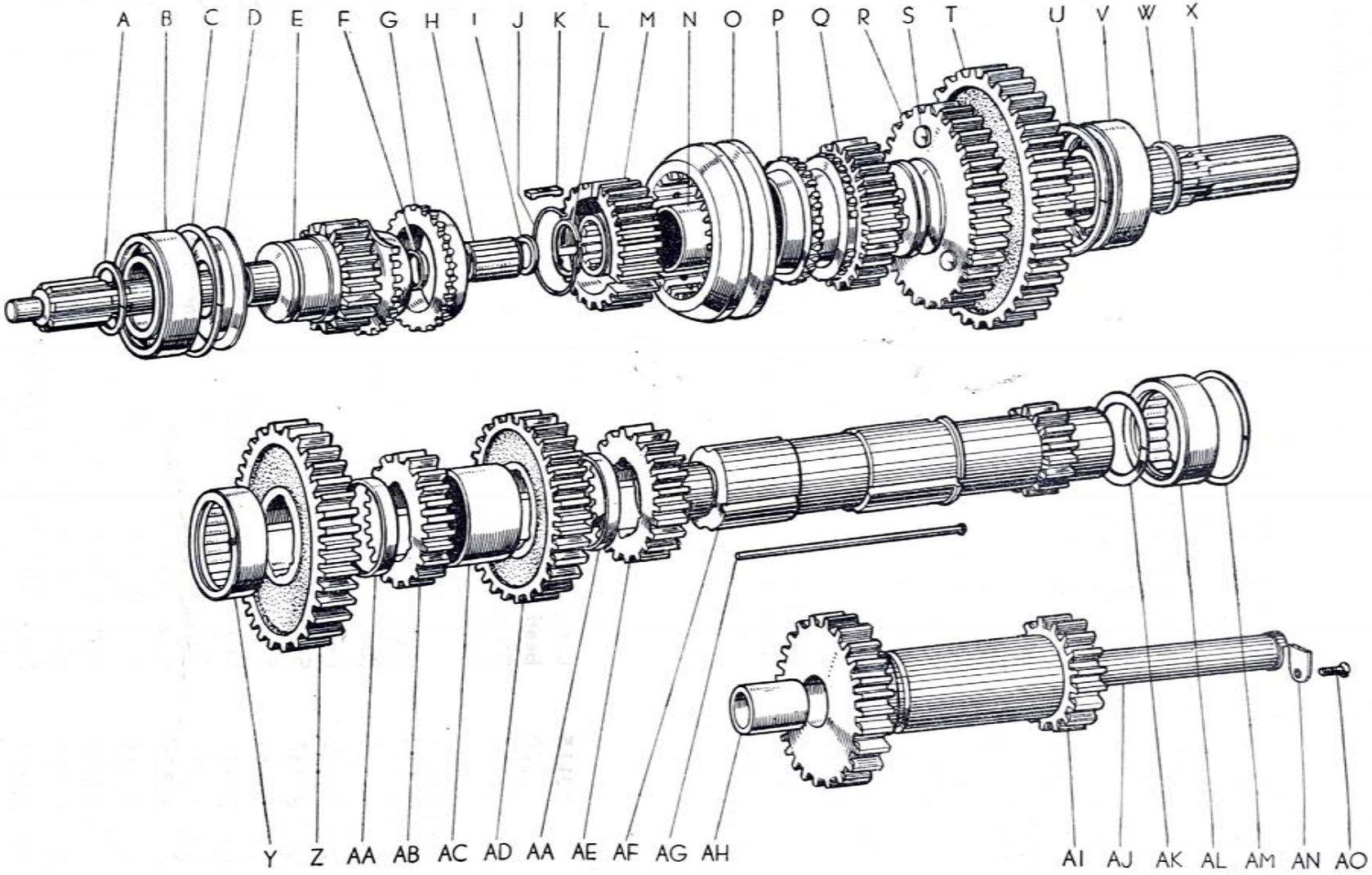

KEY	PART NO.	PART NAME	PER CAP	MODEL
(FIG. 34)				
S	2BJ 33353	Rivet, second speed gear	4	BJ25. BJ25L
T	2BJ 33351	Gear, low & reverse sliding	1	BJ25. BJ25L
U	32110	Ring, spline shaft rear bearing snap	1	BJ25. BJ25L
V	3282	Bearing, spline shaft rear	1	BJ25. BJ25L
W	3291	Ring, spline shaft snap	1	BJ25. BJ25L
X	2BJ 33331	Shaft, spline	1	BJ25. BJ25L
Y	3278	Bearing, counter shaft front	1	BJ25. BJ25L
	2BJ 33401	Counter gear complete (includes KEY—Z~AG of Fig.—34)	1	BJ25. BJ25L
Z	2BJ 33431	Gear, counter drive	1	BJ25. BJ25L
AA	2BJ 33432	Spacer, counter gear	2	BJ25. BJ25L
AB	2BJ 33437	Gear, counter reverse	1	BJ25. BJ25L
AC	2BJ 33434	Spacer, counter reverse & third gear	1	BJ25. BJ25L
AD	2BJ 33433	Gear, counter third speed	1	BJ25. BJ25L
AE	2BJ 33435	Gear, counter second speed	1	BJ25. BJ25L
AF	2BJ 33411	Gear, counter shaft & low speed	1	BJ25. BJ25L
AG	2BJ 33441	Key, counter gear shaft	4	BJ25. BJ25L
AH	3250	Bush, reverse idler gear	2	BJ25. BJ25L
	2BJ 33402	Reverse idler gear complete (includes KEY—AH, AI of Fig.—34)	1	BJ25. BJ25L
AI	2BJ 33455	Gear, reverse idler	1	BJ25. BJ25L
AJ	3273	Shaft, reverse idler gear	1	BJ25. BJ25L
AK	3293	Washer, counter gear thrust	1	BJ25. BJ25L
AL	3279	Bearing, counter shaft rear	1	BJ25. BJ25L
AM	BM 33416	Shim, counter shaft rear bearing	2~3	BJ25. BJ25L
AN	BJ 33452	Plate, reverse idler gear shaft lock	1	BJ25. BJ25L
AO	SBN 0815	Bolt	1	

SPACE FOR MEMO

FIG.—35 TRANSFER

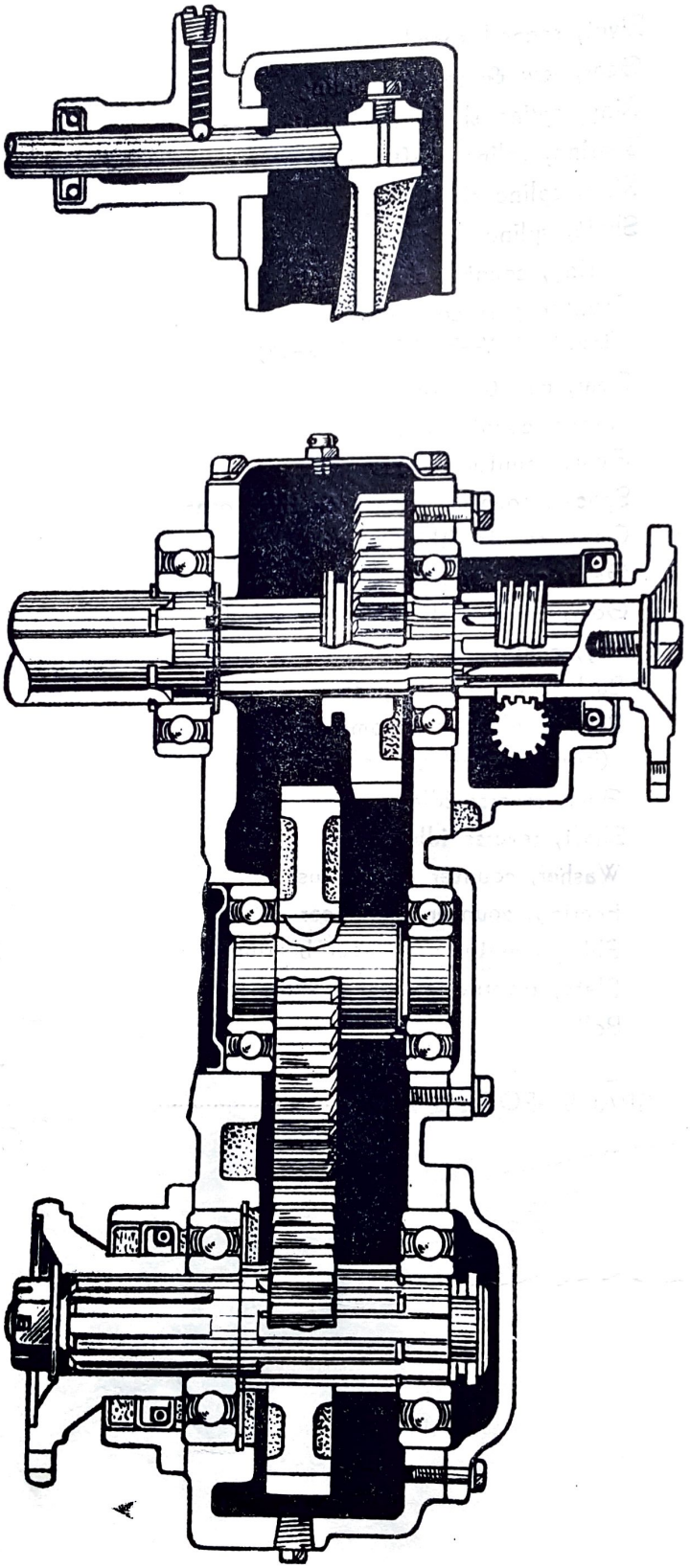

KEY	PART NO.	PART NAME	PER CAR	MODEL

TRANSFER

	2BJ 34000	Transfer assembly (includes KEY—A~R, V~AO of Fig.—36 and KEY—A~R, V~AQ of Fig.—37)	1	BJ25

TRANSFER CASE & COVER

(FIG. 36)

A	TBN 1030	Bolt	1	
B	SWH 10	Washer, spring	11	
C	SB 33487	Washer, front joint yoke retainer	1	BJ25. BJ25L
D	BJ 33481	Retainer, universal joint front yoke	1	BJ25. BJ25L
E	TBN 0820	Bolt	17	
F	SWH 08	Washer, spring	29	
	2BJ 33101	Universal joint front retainer complete	1	BJ25
	BJ 33101	Universal joint front retainer complete (includes KEY—G, W of Fig—36)	1	BJ25L
G	2BJ 33143	Retainer, universal joint front	1	BJ25
	BJ 33143	Retainer, universal joint front	1	BJ25L
H	BJ 33142	Packing, universal joint front retainer	1	BJ25. BJ25L
I	TBN 0815	Bolt	4	
J	BQ 34101	Transfer case upper cover complete (includes KEY—K of Fig.—36)	1	BJ25. BJ25L
K	BQ 42121	Plug, breather	1	BJ25. BJ25L
L	BM 42122	Cap, breather plug	1	BJ25. BJ25L
M	WP 1625	Pin, cotter	1	
N	BQ 34135	Separator, transfer case upper cover	1	BJ25. BJ25L
O	BJ 34132	Packing, transfer case upper cover	1	BJ25. BJ25L
P	BJ 33161	Packing, transfer case front	1	BJ25. BJ25L
Q	TBK 0830	Bolt	4	
	YBN 1025	Bolt	2	
R	BJ 34612	Lock, transfer idle gear shaft bearing front	1	BJ25. BJ25L
S	TBK 1028T	Bolt	4	
T	TNN 1008	Nut	8	
U	TBK 1040	Bolt	4	
V	SB 33404	Joint, yoke oil retainer complete	1	BJ25. BJ25L
W	FA 33485	Bush, driven gear shaft	1	BJ25. BJ25L
X	SBN 0815	Bolt	1	
Y	BJ 34613	Lock, transfer idle gear shaft bearing rear	1	BJ25. BJ25L
Z	BJ 34614	Packing, transfer idle gear shaft bearing lock rear	1	BJ25. BJ25L
AA	BJ 34414	Cap, transfer front drive rear bearing	1	BJ25. BJ25L
AB	BJ 34413	Packing, transfer front drive front bearing cap	2	BJ25. BJ25L
AC	BJ 34111	Case, transfer	1	BJ25. BJ25L
AD	32127	Plug, transmission case oil	2	BJ25. BJ25L

FIG.—36 TRANSFER CASE & COVER

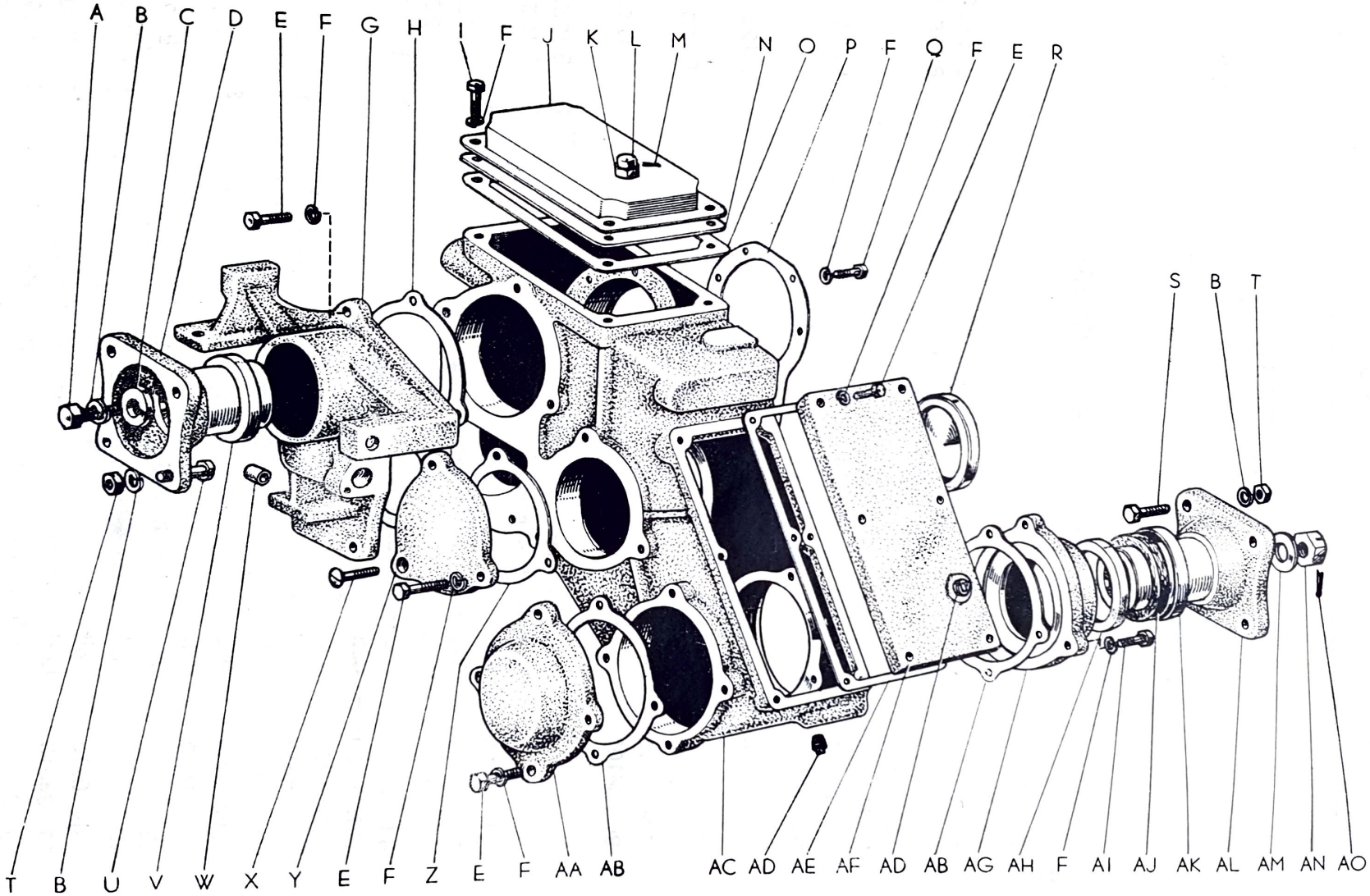

KEY	PART NO.	PART NAME	PER CAR	MODEL
(FIG. 36)				
AE	BJ 34134	Packing, transfer case side cover	1	BJ25. BJ25L
AF	BJ 34133	Cover, transfer case side	1	BJ25. BJ25L
AG	BJ 34412	Cap, transfer front drive front bearing	1	BJ25. BJ25L
AH	FA 41417	Oil seal complete	1	BJ25. BJ25L
AI	TBN 0825	Bolt	4	
AJ	BJ 34415	Packing, transfer front drive shaft	1	BJ25. BJ25L
AK	BJ 34416	Cover, transfer front drive shaft packing	1	BJ25. BJ25L
AL	KC 3423	Retainer, second & third universal joint	1	BJ25. BJ25L
AM	PWT 6019	Washer, plate	1	
AN	CNN 1913	Nut	1	
AO	WP 4040	Pin, cotter	1	

TRANSFER GEAR & SHIFT LEVER

(FIG. 37)				
A	BRT 6306	Bearing, transfer rear & idler shaft	3	BJ25. BJ25L
B	BJ 33486	Gear, speedometer drive	1	BJ25. BJ25L
C	BJ 33485	Spacer, speedometer drive gear	1	BJ25. BJ25L
D	BJ 33333	Ring, spline shaft rear	1	BJ25. BJ25L
E	BJ 34351	Gear, transfer shift	1	BJ25. BJ25L
F	2BJ 34502	Gear shift lever knob complete	1	BJ25. BJ25L
	2BJ 34501	Transfer shift lever complete (includes KEY—AM of Fig.—37)	1	BJ25. BJ25L
G	2BJ 34518	Lever, transfer shift	1	BJ25. BJ25L
H	BJ 34514	Fork, transfer gear shift	1	BJ25. BJ25L
I	SWH 08	Washer, spring	5	
J	BJ 34522	Pin, transfer fork shaft	1	BJ25. BJ25L
K	3242	Ball, gear shift fork lock	1	BJ25. BJ25L
L	SB 33213	Spring, gear shift fork lock ball	1	BJ25. BJ25L
M	BJ 34517	Plug, transfer shift fork shaft lock ball	1	BJ25. BJ25L
N	BJ 33487	Gear, speedometer driven	1	BJ25. BJ25L
O	BX 33486	Packing, speedometer shaft sleeve	1	BJ25. BJ25L
P	RH 33401	Speedometer shaft sleeve complete	1	BJ25. BJ25L
Q	BX 33484	Stopper, speedometer shaft sleeve	1	BJ25. BJ25L
R	TBN 0815	Bolt	1	
S	RH 33485	Collar, speedometer cable shaft packing	1	BJ25. BJ25L
T	RH 33486	Packing, speedometer cable shaft	1	BJ25. BJ25L
U	BX 57300	Speedometer cable assembly	1	BJ25. BJ25L
V	1424	Key, crankshaft & camshaft	1	BJ25. BJ25L
W	BJ 34611	Shaft, transfer idle gear	1	BJ25. BJ25L
X	BJ 34615	Spacer, transfer idle gear	2	BJ25. BJ25L
Y	BJ 34631	Gear, transfer idle	1	BJ25. BJ25L
Z	3282	Bearing, spline shaft rear	2	BJ25. BJ25L
AA	3291	Ring, spline shaft snap	1	BJ25. BJ25L

FIG.—37 TRANSFER GEAR & SHIFT LEVER

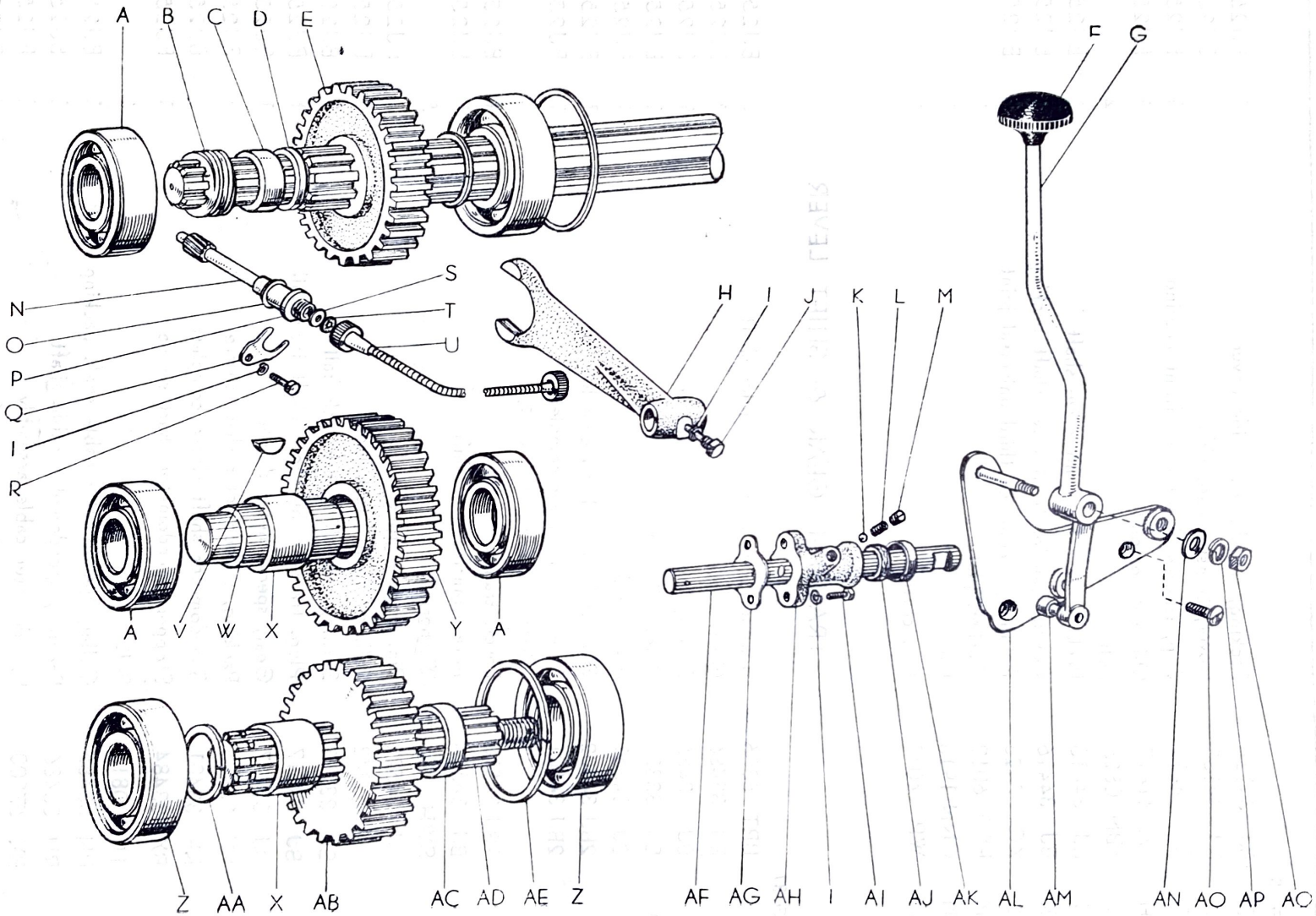

KEY	PART NO.	PART NAME	PER CAR	MODEL
(FIG. 37)				
AB	BJ 34431	Gear, transfer front drive	1	BJ25. BJ25L
AC	BJ 34418	Spacer, transfer front drive gear	1	BJ25. BJ25L
AD	BJ 34411	Shaft, transfer front drive	1	BJ25. BJ25L
AE	32110	Ring, spline shaft rear bearing snap	1	BJ25. BJ25L
AF	2BJ 34513	Shaft, transfer fork	1	BJ25. BJ25L
AG	BJ 34512	Packing, transfer shift fork shaft guide	1	BJ25. BJ25L
AH	2BJ 34511	Guide, transfer shaft	1	BJ25. BJ25L
AI	TBN 0820	Bolt	3	
AJ	BJ 34515	Packing, transfer shift fork shaft	1	BJ25. BJ25L
AK	BJ 34516	Lock, transfer shift fork shaft felt packing	1	BJ25. BJ25L
AL	2BJ 46101	Hand brake lever set plate complete	1	BJ25. BJ25L
AM	2BJ 34519	Pin, transfer shift lever	1	BJ25. BJ25L
AN	PWL 0010	Washer, plate	1	
AO	2BJ 46121	Bolt, hand brake lever set	1	BJ25. BJ25L
AP	SWH 10	Washer, spring	1	
AQ	TNN 1008	Nut	1	

CENTER BRAKE

(FIG. 38)				
	2BJ 46110	Hand brake lever assembly (includes KEY—A, J~S of Fig.—38)	1	BJ25
	BJ25L46110	Hand brake lever assembly	1	BJ25L
A	WP 2015	Pin, cotter	4	
B	S 11187	Washer, cylinder head bolt	3	BJ25. BJ25L
C	BX 46239	Washer, mission brake cam pin coil spring	3	BJ25. BJ25L
D	BX 46231	Cam, misssion brake	2	BJ25. BJ25L
E	BX 46142	Link, mission brake adjusting	1	BJ25. BJ25L
F	BX 46238	Pin, mission brake parking shoe rod	1	BJ25. BJ25L
G	BX 46233	Retainer, mission brake cam	2	BJ25. BJ25L
H	BX 46232	Pin, mission brake cam	2	BJ25. BJ25L
I	BX 46234	Pin, mission brake cam retainer	1	BJ25. BJ25L
J	FA 46101	Hand brake lever sector complete	1	BJ25. BJ25L
K	FA 46125	Spacer, hand brake lever pawl	1	BJ25. BJ25L
L	FA 46118	Pawl, hand brake lever	1	BJ25. BJ25L
M	2BJ 46102	Hand brake lever pawl rod knob complete	1	BJ25. BJ25L
N	2BJ 46103	Hand brake lever knob complete	1	BJ25. BJ25L
O	2BJ 46111	Lever, hand brake	1	BJ25. BJ25L
P	WP 3018	Pin, cotter	1	
Q	PWL 0012	Washer, plate	1	
R	BX 46121	Pin, hand brake lever	1	BJ25. BJ25L
S	2BJ 46231	Rod, hand brake pull	1	BJ25
	BJ25L46231	Rod, hand brake pull	1	BJ25L
T	SWH 10	Washer, spring	2	

FIG.—38 CENTER BRAKE

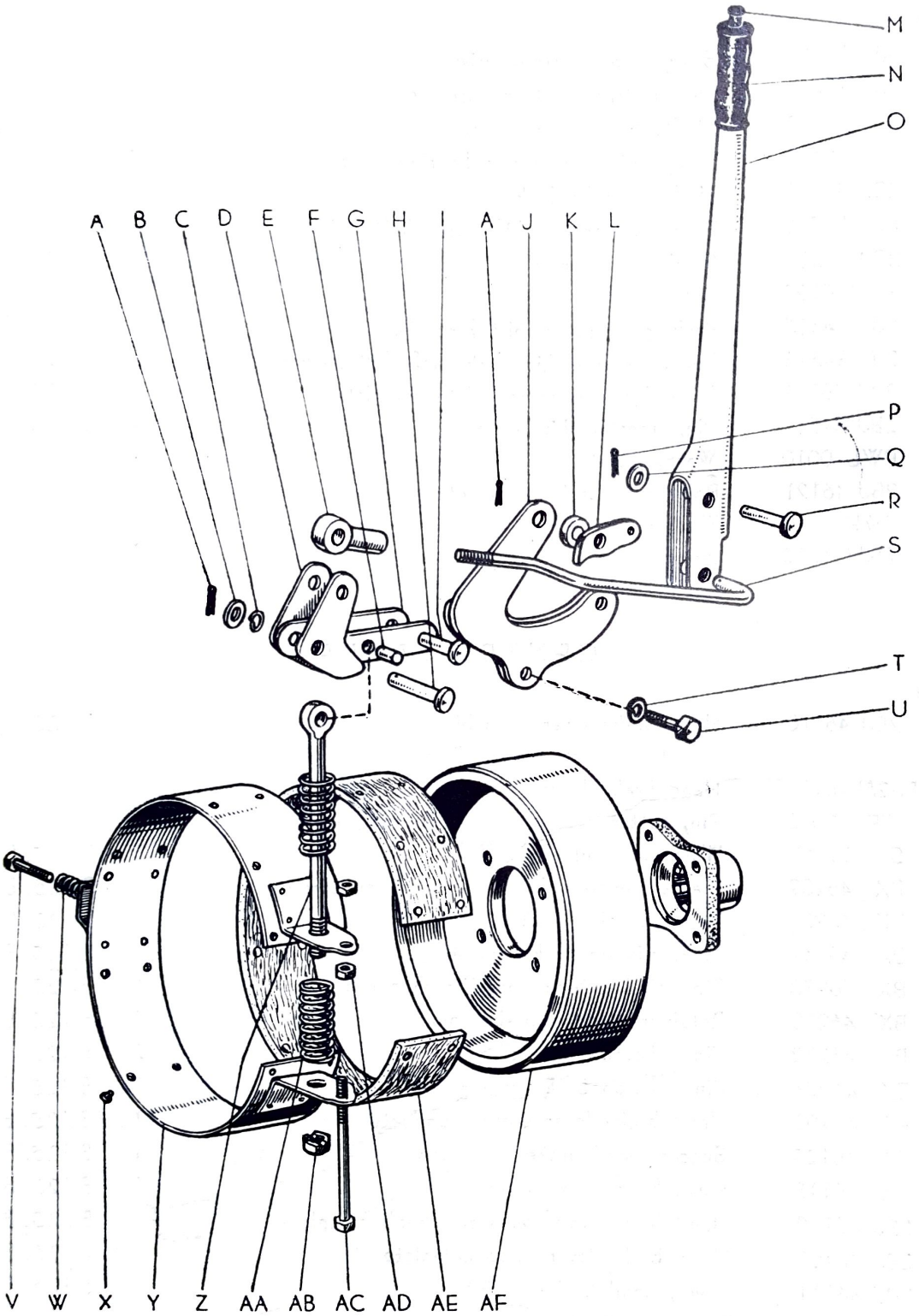

KEY	PART NO.	PART NAME	PER CAR	MODEL
(FIG. 38)				
U	TBN 1020	Bolt		
	YBN 1030	Bolt	2	
V	TBN 0840W	Bolt	2	BJ25Lonly
W	KC 4706	Spring, mission brake shoe lug	1	
X	SB 47392	Rivet, brake lining	1	BJ25. BJ25L
	SB 46250	Brake shoe assembly (includes KEY—X, Y, AE of Fig.—38)	16	BJ25. BJ25L
Y	SB 46205	Brake shoes complete	1	BJ25. BJ25L
Z	BJ 46232	Rod, mission brake parking shoe	1	BJ25. BJ25L
AA	KC 4712	Spring, mission brake adjusting	1	BJ25. BJ25L
AB	KC 4713	Nut, mission brake adjusting	2	BJ25. BJ25L
AC	JBN 0665TZ	Bolt	1	BJ25. BJ25L
AD	JNN 0605	Nut	1	
AE	SB 46271	Lining, center brake	2	
AF	BJ 46211	Drum, center brake	1	BJ25. BJ25L
			1	BJ25. BJ25L

PROPELLER SHAFT & UNIVERSAL JOINT

(FIG. 39)				
	2BJ 37400	Front propeller shaft assembly (includes KEY—A~M of Fig.—39)	1	BJ25. BJ25L
	BJ 37500	Rear propeller shaft assembly (includes KEY—A~M of Fig.—39)	1	BJ25. BJ25L
A	KB 3411	Ring, universal joint needle bearing snap	16	BJ25. BJ25L
	AKC 3407	Universal joint needle roller bearing unit (includes KEY—B~E of Fig.—39)	16	BJ25. BJ25L
B	KC 3407	Bearing, universal joint needle roller	16	BJ25. BJ25L
C	KC 3408	Roller, universal joint needle	384	BJ25. BJ25L
D	KC 3409	Seat, universal joint needle roller	16	BJ25. BJ25L
E	KC 3410	Cover, universal joint needle roller seat	16	BJ25. BJ25L
F	KC 3411	Ring, universal joint cork	16	BJ25. BJ25L
G	KC 3412	Seat, universal joint cork ring	16	BJ25. BJ25L
H	43118	Nipple, grease	6	BJ25. BJ25L
I	KC 3045	Universal joint spider complete	4	BJ25. BJ25L
J	KC 3404	Yoke, universal joint retainer	4	BJ25. BJ25L
	KC 30412	Second universal joint assembly (includes KEY—A~K of Fig.—39)	2	BJ25. BJ25L
K	KC 3042	Second unversal joint rear yoke complete	2	BJ25. BJ25L
L	KC 3044	Second universal joint oil cover complete	2	BJ25. BJ25L
M	2BJ 37103	Front propeller shaft complete	1	BJ25. BJ25L
	BJ 37104	Rear propeller shaft complete	1	BJ25. BJ25L

FIG.—41 REAR AXLE HOUSING & STABILIZER

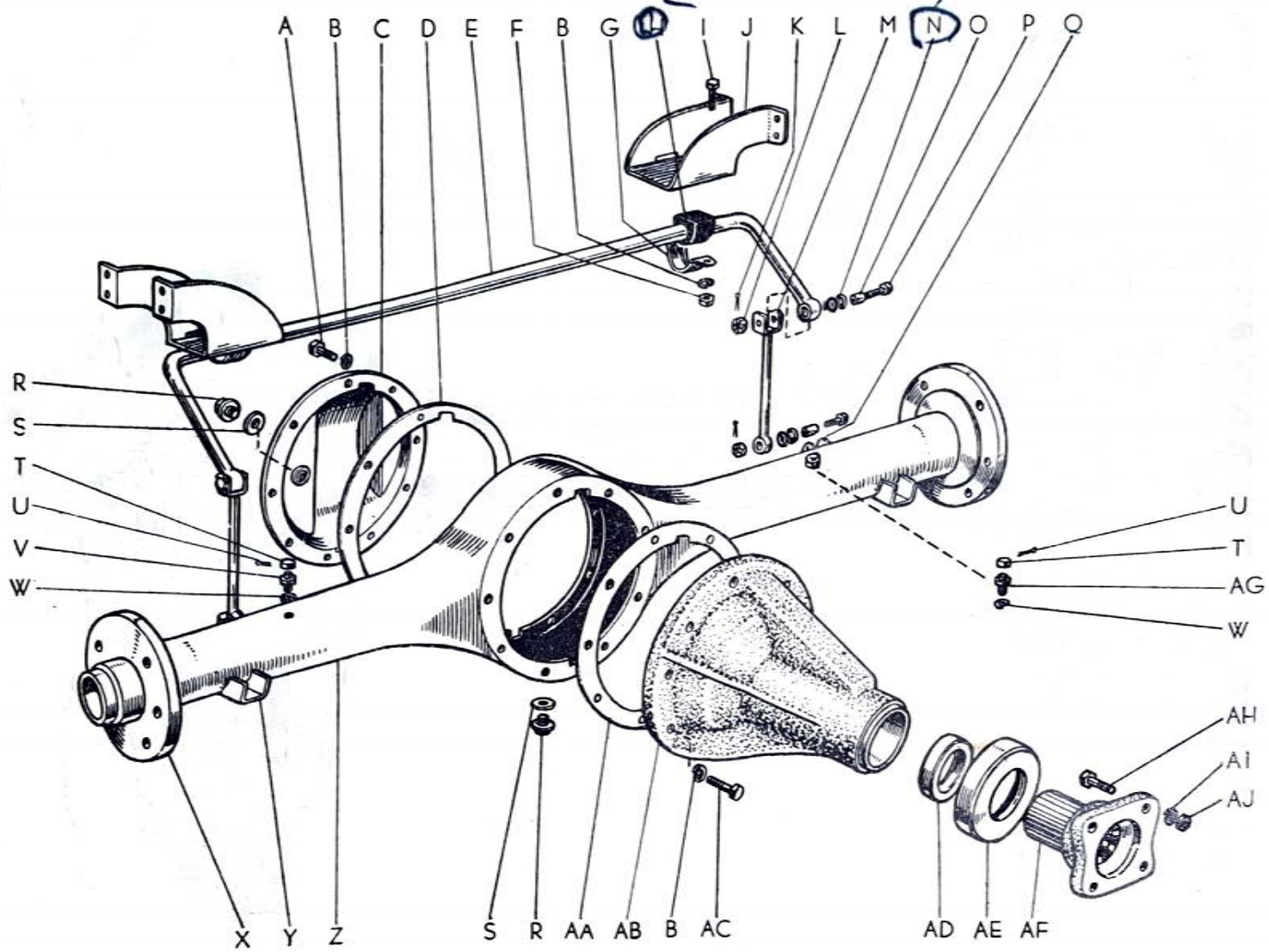

KEY	PART NO.	PART NAME	PER CAR	MODEL

REAR AXLE

	2BJ 42000	Rear axle assembly (includes KEY—B, Q~AG of Fig.—41 and KEY—A~AA of Fig.—42 and KEY—A~N, P of Fig.—43 and KEY—A~T of Fig.—50 and KEY—A~I, K~O of Fig.—51)	1	BJ25. BJ25L

REAR AXLE HOUSING & STABILIZER

(FIG. 41)

A	TBN 0815	Bolt	10	
B	SWH 08	Washer, spring	22	
C	2BJ 42173	Cover, rear axle housing	1	BJ25. BJ25L
D	BJ 42171	Packing, rear axle housing cover	1	BJ25. BJ25L
E	2BH 48621	Stabilizer, rear	1	BJ25. BJ25L
F	TNN 0806	Nut	2	
G	2BH 48624	Support, rear stabilizer	2	BJ25. BJ25L
H	2BH 48623	Support gum, rear stabilizer	2	BJ25. BJ25L
I	TBN 0820	Bolt	2	
J	BJ20 51382	Bracket, stabilizer upper L. H.	1	BJ25. BJ25L
	BJ20 51381	Bracket, stabilizer upper R. H.	1	BJ25. BJ25L
K	WP 2025	Pin, cotter	4	
L	CNN 1009	Nut	4	
M	2BJ 48601	Rear stabilizer link complete	2	BJ25. BJ25L
N	RR 48622	Bush, stabilizer	4	BJ25. BJ25L
O	RR 48626	Piece, stabilizer bush	4	BJ25. BJ25L
P	RR 48627	Pin, stabilizer link	4	BJ25. BJ25L
Q	2BJ 42116	Bracket, stabilizer link L. H.	1	BJ25. BJ25L
	2BJ 42115	Bracket, stabilizer link R. H.	1	BJ25. BJ25L
R	RS 42174	Plug, rear axle filler & drain	2	BJ25. BJ25L
S	3611	Packing, rear axle filler plug	2	BJ25. BJ25L
T	BM 42122	Cap, breather plug	2	BJ25. BJ25L
U	WP 1625	Pin, cotter	2	
V	SKB 42121	Plug, rear axle breather	1	BJ25. BJ25L
W	SWL 10	Washer, spring	2	BJ25. BJ25L
X	BJ 42113	Flange, rear axle brake	2	BJ25. BJ25L
Y	2BJ 42114	Seat, spring	2	BJ25. BJ25L
	2BJ 42110	Rear axle housing assembly (includes KEY—Q, X~Z of Fig.—41 and KEY—U of Fig.—54)	1	BJ25. BJ25L
Z	2BJ 42101	Rear axle housing complete	1	BJ25. BJ25L
AA	BJ 42116	Packing, differential carrier	1	BJ25. BJ25L
	2BJ 41101	Differential carrier complete (includes KEY—AB of Fig.—41 and YEY—S~U of Fig.—42)	1	BJ25. BJ25L
AB	2BJ 41111	Carrier, differential	1	BJ25. BJ25L

KEY	PART NO.	PART NAME	PER CAR	MODEL
(FIG. 41)				
AC	TBK 0820	Bolt	10	
AD	BJ 41201	Drive pinion yoke oil retainer complete	1	BJ25. BJ25L
AE	BJ 41222	Cover, differential dust	1	BJ25. BJ25L
AF	BJ 41191	Retainer, differential joint yoke	1	BJ25. BJ25L
AG	RS 42121	Plug, rear axle breather	1	BJ25. BJ25L
AH	TBK 1028T	Bolt	4	
AI	SWH 10	Washer, spring	4	
AJ	TNN 1008	Nut	4	

DIFFERENTIAL

(FIG. 42)				
	2BJ 41000	Differential assembly (includes KEY—AB, AD~AF of Fig.—41 and KEY—A~AA of Fig.—42)	1	BJ25. BJ25L
A	SG 41352	Washer, differential pinion thrust	2	BJ25. BJ25L
B	3521	Pinion, differential	2	BJ25. BJ25L
C	SG 41351	Washer, side gear thrust	2	BJ25. BJ25L
D	3520	Gear, differential side	2	BJ25. BJ25L
E	3508	Shaft, differential pinion	1	BJ25. BJ25L
F	SWH 08	Washer, spring	3	
G	3576	Pin, differential pinion shaft	1	BJ25. BJ25L
H	SG 41312	Spacer, differential pinion No. 1	1	BJ25. BJ25L
	SG 41313	Spacer, differential pinion No. 2	1	BJ25. BJ25L
	BJ 41202	Differential drive pinion & ring gear set (includes KEY—I, X of Fig.—42)	1	BJ25. BJ25L
I	BJ 41211	Pinion, differential drive	1	BJ25. BJ25L
J	BJ 41212	Shim, drive pinion adjust No. 1	1~2	BJ25. BJ25L
	BJ 41213	Shim, drive pinion adjust No. 2	1~2	BJ25. BJ25L
	BJ 41214	Shim, drive pinion adjust No. 3	1~2	BJ25. BJ25L
	BJ 41215	Shim, drive pinion adjust	1~2	BJ25. BJ25L
	BJ 41216	Plate, drive pinion thrust	1	BJ25. BJ25L
K	BRT 31307	Bearing, drive pinion rear	1	BJ25. BJ25L
L	RK 41221	Spacer, differential drive pinion	1	BJ25. BJ25L
M	BJ 41217	Shim, drive pinion spacer adjust No. 1	1~2	BJ25. BJ25L
	BJ 41218	Shim, drive pinion spacer adjust No. 2	1~2	BJ25. BJ25L
	BJ 41219	Shim, drive pinion spacer adjust No. 3	1~2	BJ25. BJ25L
	BJ 41223	Shim, drive pinion spacer adjust No. 4	1~2	BJ25. BJ25L
N	KB 4053	Steering worm rear taper roller bearing assembly	1	BJ25. BJ25L
O	BJ 41121	Washer, differential drive pinion	1	BJ25. BJ25L
P	CNN 1612T	Nut	1	
Q	WP 4025	Pin, cotter	1	
R	RS 41312	Nut, differential adjusting	2	BJ25. BJ25L
S	TBN 1260	Bolt	4	
T	SWH 12	Washer, spring	4	

FIG.—42 DIFFERENTIAL

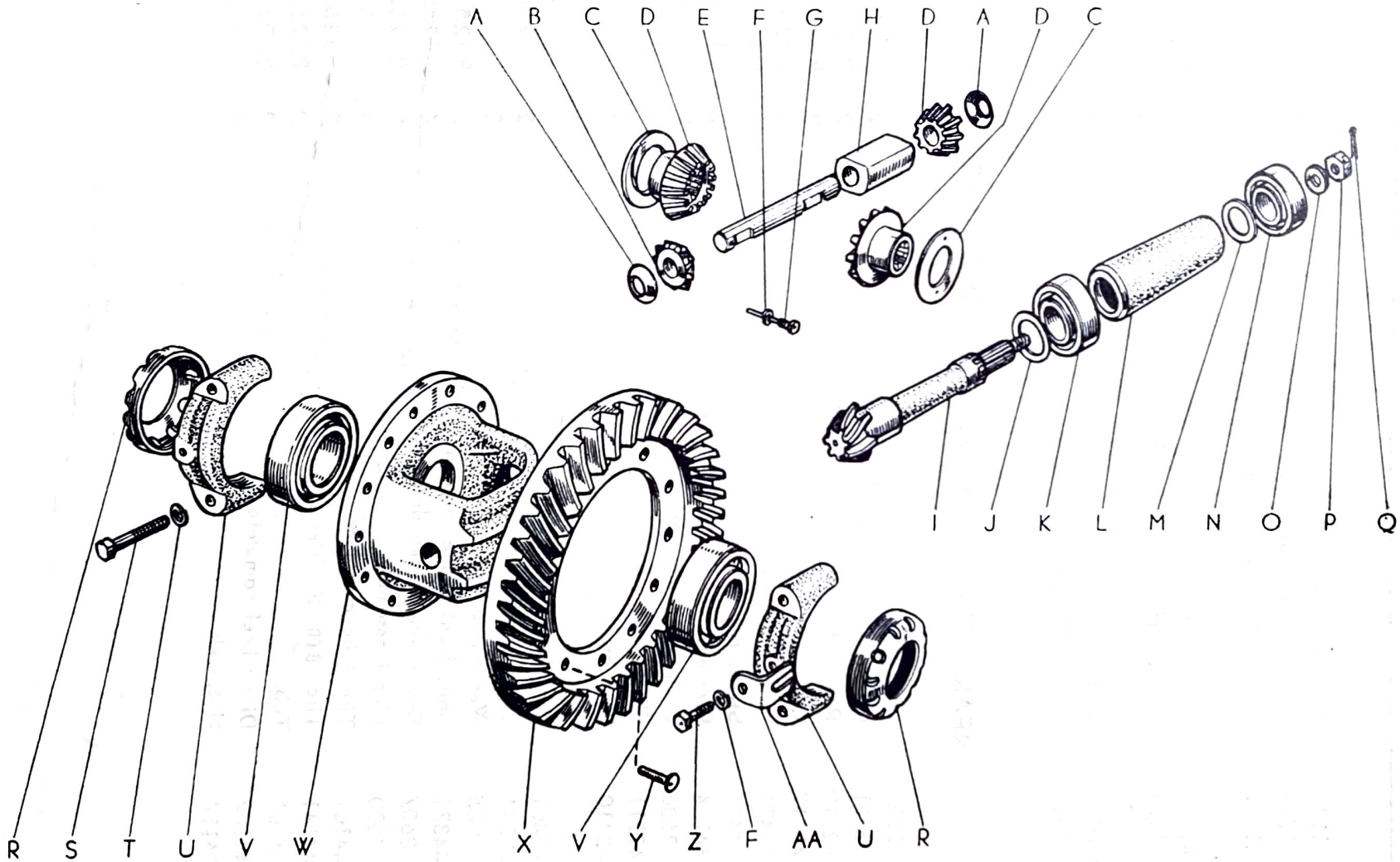

KEY	PART NO.	PART NAME	PER CAR	MODEL
(FIG. 42)				
U	SB 41312	Cap, differential carrier	2	BJ25. BJ25L
V	3516	Bearing, differential side	2	BJ25. BJ25L
	BJ 41302	Differential case complete (includes KEY—W~Y of Fig.—42)	1	BJ25. BJ25L
W	BJ 41315	Case, differential	1	BJ25. BJ25L
X	BJ 41251	Gear, differential drive ring	1	BJ25. BJ25L
Y	SB 41252	Rivet, differential ring gear	6	BJ25. BJ25L
Z	TBN 0815	Bolt	2	
AA	RS 41313	Lock, differential adjusting nut	2	BJ25. BJ25L

REAR AXLE SHAFT, DRUM & DISC WHEEL

(FIG. 43)				
A	3624	Lock, rear axle shaft	2	BJ25. BJ25L
B	SB 42351	Collar, rear axle bearing	2	BJ25. BJ25L
C	SB 42310	Rear axle shaft bearing assembly	2	BJ25. BJ25L
D	FA 41417	Oil seal complete	2	BJ25. BJ25L
E	SB 42471	Bolt, axle hub	12	BJ25. BJ25L
F	4415	Strap, rear brake drum	2	BJ25. BJ25L
G	44154	Packing, rear brake drum strap	2	BJ25. BJ25L
H	3606	Collar, axle housing side	2	BJ25. BJ25L
I	SB 42211	Shaft, rear axle	2	BJ25. BJ25L
	SB 42410	Rear brake drum assembly (includes KEY—C, E~G, I, J, N, P of Fig.—43)	2	BJ25. BJ25L
J	SB 42401	Rear brake drum complete	2	BJ25. BJ25L
K	SB 47391	Strap, brake drum inspection hole	2	BJ25. BJ25L
L	SWL 05	Washer, spring	2	
M	44371	Bolt, front brake drum inspection hole cover	2	BJ25. BJ25L
N	AE 3607	Screw, rear brake drum set	4	BJ25. BJ25L
	BJ 44000	Wheel assembly	2	BJ25. BJ25L
	BJ 44101	Tire tube complete	2	BJ25. BJ25L
	BJ 44141	Tire (6.00—16—6ply)	2	BJ25. BJ25L
	BJ 44161	Tube	2	BJ25. BJ25L
O	BJ 44102	Disc wheel complete	2	BJ25. BJ25L
P	36114	Nut, axle	12	BJ25. BJ25L

FIG.—43 REAR AXLE SHAFT & DISC WHEEL

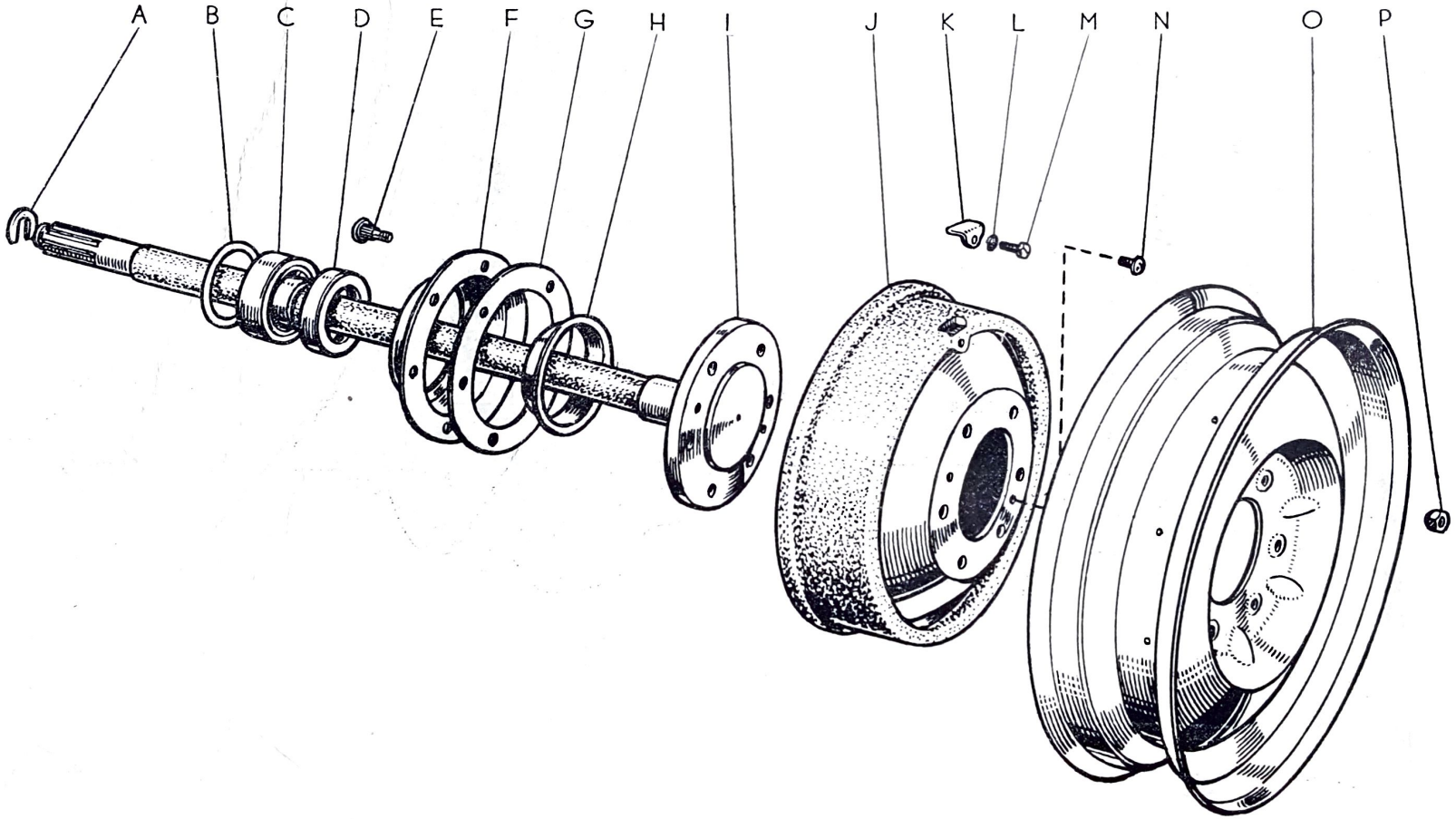

FIG.—45 FRONT AXLE HOUSING & STABILIZER

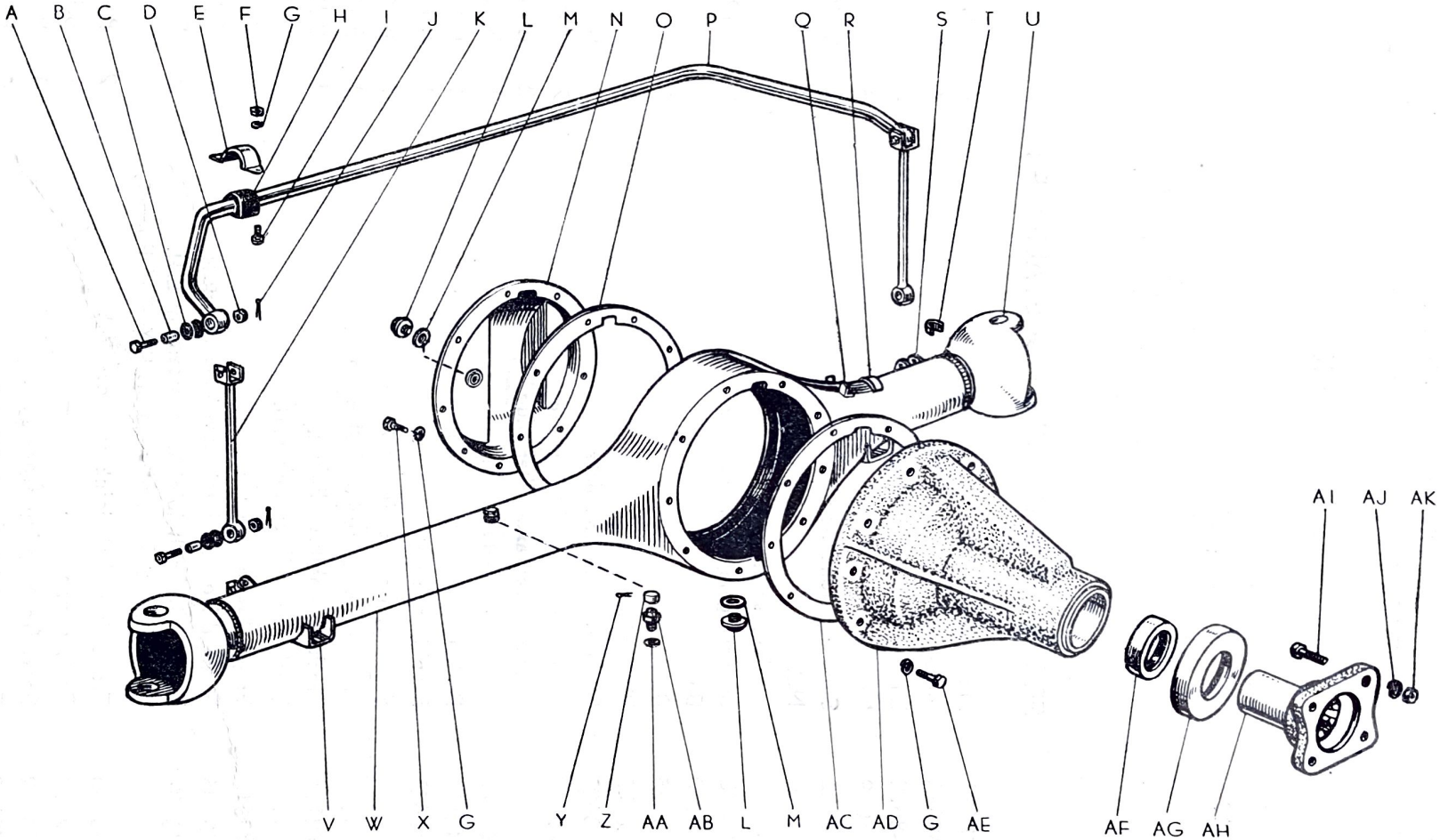

KEY	PART NO.	PART NAME	PER CAR	MODEL
(FIG. 45)				
AA	SWL 10	Washer, spring	1	
AB	RS 42121	Plug, rear axle breather	1	BJ25. BJ25L
AC	BJ 42116	Packing, differential carrier	1	BJ25. BJ25L
AD	2BJ 41111	Carrier, differential	1	BJ25. BJ25L
AE	TBK 0820	Bolt	10	
AF	BJ 41201	Drive pinion yoke oil retainer complete	1	BJ25. BJ25L
AG	BJ 41222	Cover, differential dust	1	BJ25. BJ25L
AH	BJ 41191	Retainer, differential joint yoke	1	BJ25. BJ25L
AI	TBK 1028T	Bolt	4	BJ25. BJ25L
AJ	SWH 10	Washer, spring	4	
AK	TNN 1008	Nut	4	

DIFFERENTIAL

(FIG. 42)				
	2BJ 41000	Differential assembly (includes KEY—AB, AD~AF of Fig.—41 and KEY—A~AA of Fig.—42)	1	BJ25. BJ25L
A	SG 41352	Washer, differential pinion thrust	2	BJ25. BJ25L
B	3521	Pinion, differential	2	BJ25. BJ25L
C	SG 41351	Washer, side gear thrust	2	BJ25. BJ25L
D	3520	Gear, differential side	2	BJ25. BJ25L
E	3508	Shaft, differential pinion	1	BJ25. BJ25L
F	SWH 08	Washer, spring	3	
G	3576	Pin, differential pinion shaft	1	BJ25. BJ25L
H	SG 41312	Spacer, differential pinion No. 1	1	BJ25. BJ25L
	SG 41313	Spacer, differential pinion No. 2	1	BJ25. BJ25L
	BJ 41202	Differential drive pinion & ring gear set (includes KEY—I, X of Fig.—42)	1	BJ25. BJ25L
I	BJ 41211	Pinion, differential drive	1	BJ25. BJ25L
J	BJ 41212	Shim, drive pinion adjust No. 1	1~2	BJ25. BJ25L
	BJ 41213	Shim, drive pinion adjust No. 2	1~2	BJ25. BJ25L
	BJ 41214	Shim, drive pinion adjust No. 3	1~2	BJ25. BJ25L
	BJ 41215	Shim, drive pinion adjust	1~2	BJ25. BJ25L
	BJ 41216	Plate, drive pinion thrust	1	BJ25. BJ25L
K	BRT 31307	Bearing, drive pinion rear	1	BJ25. BJ25L
L	RK 41221	Spacer, differential drive pinion	1	BJ25. BJ25L
M	BJ 41217	Shim, drive pinion spacer adjust No. 1	1~2	BJ25. BJ25L
	BJ 41218	Shim, drive pinion spacer adjust No. 2	1~2	BJ25. BJ25L
	BJ 41219	Shim, drive pinion spacer adjust No. 3	1~2	BJ25. BJ25L
	BJ 41223	Shim, drive pinion spacer adjust No. 4	1~2	BJ25. BJ25L
N	KB 4053	Steering worm rear taper roller bearing assembly	1	BJ25. BJ25L
O	BJ 41121	Washer, differential drive pinion	1	BJ25. BJ25L
P	CNN 1612T	Nut	1	
Q	WP 4025	Pin, cotter	1	

KEY	PART NO.		PART NAME	PER CAR	MODEL
(FIG. 42)					
R	RS	41312	Nut, differential adjusting	2	BJ25. BJ25L
S	TBN	1260	Bolt	4	
T	SWH	12	Washer, spring	4	
U	SB	41312	Cap, differential carrier	2	BJ25. BJ25L
V		3516	Bearing, differential side	2	BJ25. BJ25L
	BJ	41302	Differential case complete (includes KEY—W~Y of Fig.—42)	1	BJ25. BJ25L
W	BJ	41315	Case, differential	1	BJ25. BJ25L
X	BJ	41251	Gear, differential drive ring	1	BJ25. BJ25L
Y	SB	41252	Rivet, differential ring gear	6	BJ25. BJ25L
Z	TBN	0815	Bolt	2	
AA	RS	41313	Lock, differential adjusting nut	2	BJ25. BJ25L

TIE-ROD, RELAY ROD, DRAG LINK & CENTER ARM

(FIG. 46)					
	2BJ	43250	Tie-rod assembly (includes KEY—P~V, X~AA, AC, AD, AN, AP, AR of Fig.—46)	1	BJ25
	BJ25L	43250	Tie-rod assembly	1	BJ25L
	2BJ	45320	Drag link assembly (includes KEY—F~Y of Fig.—46)	1	BJ25. BJ25L
	2BJ	45330	Steering center arm assembly (includes KEY—B~E, AB, AE~AM of Fig.—46)	1	BJ25
	BJ25L	45330	Steering center arm assembly	1	BJ25L
	2BJ	45340	Steering relay rod assembly (includes KEY—H, P~AA, AC, AD, AN, AO, AQ of Fig.—46)	1	BJ25. BJ25L
	2BJ	45350	Drag link end R. H. assembly (includes KEY—G~O of Fig.—46)	1	BJ25. BJ25L
A	2BJ	45344	Bracket, center arm	1	BJ25
	BJ25L	45344	Bracket, center arm	1	BJ25L
B	2BJ	45338	Shaft, center arm	1	BJ25. BJ25L
C	PWL	5016	Washer, plate	1	
D	CNN	1612T	Nut	1	
E	WP	4035	Pin, cotter	1	
F	2BJ	45332	Link, drag	1	BJ25. BJ25L
G	2BJ	45333	End, drag link R. H.	1	BJ25. BJ25L
H	RS	43108	Nipple, 90° bent small grease	3	BJ25. BJ25L
I	2BJ	45334	Cover, drag link dust	1	BJ25. BJ25L
J	SG	45334	Seat, drag link ball	2	BJ25. BJ25L
K	SG	45332	Spring, drag link ball seat	1	BJ25. BJ25L
L	SG	45333	Spacer, drag link ball seat	1	BJ25. BJ25L
M	SG	45335	Plug, drag link end	1	BJ25. BJ25L
N	WP	3040	Pin, cotter	1	

FIG.—46 TIE-ROD & DRAG LINK

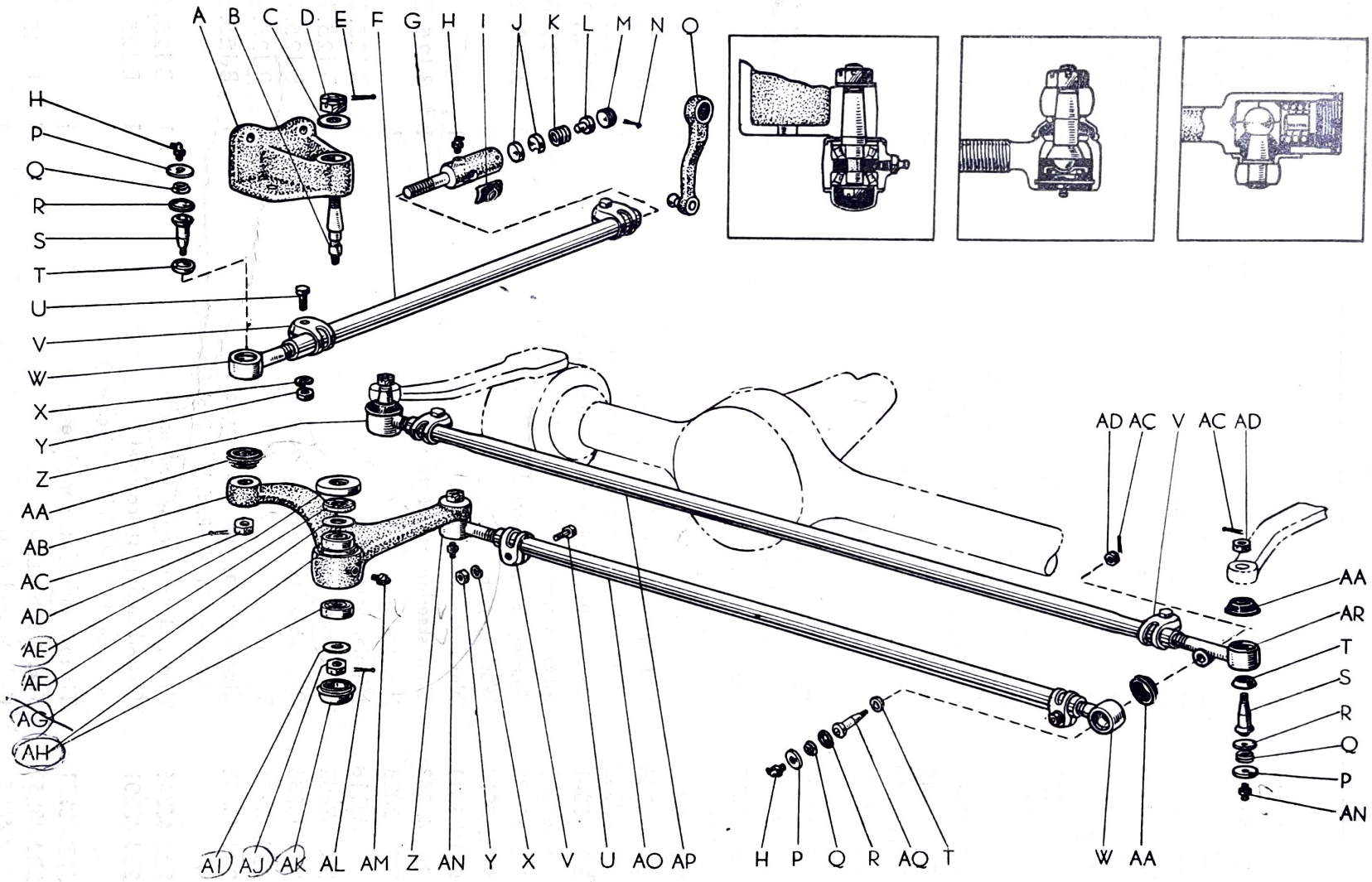

KEY	PART NO.	PART NAME	PER CAR	MODEL
(FIG. 46)				
O	2BJ 45301	Pitman arm complete	1	BJ25. BJ25L
P	RS 45355	Plug, tie-rod end	5	BJ25. BJ25L
Q	RS 45335	Spring, tie-rod end	5	BJ25. BJ25L
R	RS 45334	Seat, tie-rod end ball	5	BJ25. BJ25L
S	RS 45333	Knob, tie-rod end	4	BJ25. BJ25L
T	RS 45332	Ball, tie-rod end	5	BJ25. BJ25L
U	TBN 1040	Bolt	6	
V	RS 45352	Clamp, tie-rod adjusting tube	6	BJ25. BJ25L
	RS 45302	Tie-rod end complete (includes KEY—P~T, W of Fig.—46)	1	BJ25. BJ25L
W	RS 45354	End, tie-rod	2	BJ25. BJ25L
X	SWH 10	Washer, spring	6	
Y	TNN 1008	Nut	6	
	RR 45301	Tie-rod end R. H. complete (includes KEY—P~T, Z of Fig.—46)	2	BJ25. BJ25L
Z	RR 45354	End, tie-rod R. H.	2	BJ25. BJ25L
AA	RS 45336	Dust seal, tie-rod end	5	BJ25. BJ25L
AB	BJ 45337	Arm, steering center	1	BJ25
	BJ25L45337	Arm, steering center	1	BJ25L
AC	WP 2025	Pin, cotter	5	
AD	SB 43266	Nut, steering knuckle arm knob	5	BJ25. BJ25L
AE	BJ 45342	Cover, steering center arm dust outer	1	BJ25. BJ25L
AF	BJ 45341	Cover felt, steering center arm dust	1	BJ25. BJ25L
AG	BJ 45339	Plate, steering center arm inner	1	BJ25. BJ25L
AH	BRT 30203	Bearing, steering knuckle	2	BJ25. BJ25L
AI	PWL 4013	Washer, plate	1	
AJ	CNN 1311	Nut	1	
AK	BJ 45343	Cap, steering center arm	1	BJ25. BJ25L
AL	WP 3028	Pin, cotter	1	
AM	43118	Nipple, grease	1	BJ25. BJ25L
AN	RK 37402	Cup, small oil	3	BJ25. BJ25L
AO	2BJ 45336	Rod, steering relay	1	BJ25. BJ25L
AP	2BJ 43251	Tie-rod	1	BJ25. BJ25L
	2BJ 45302	Steering relay rod end complete (includes KEY—P~R, T, W, AQ of Fig.—46)	1	BJ25. BJ25L
AQ	2BJ 45346	Knob, steering relay rod end	1	BJ25. BJ25L
	2BJ 43201	Tie-rod end L. H. complete (includes KEY—P~T, AR of Fig.—46)	1	BJ25
	BJ25L43201	Tie-rod end L. H. complete	1	BJ25L
AR	2BJ 43252	End, tie-rod L. H.	1	BJ25
	BJ25L43252	End, tie-rod R. H.	1	BJ25L

FIG.—47 FRONT AXLE SHAFT & DISC WHEEL

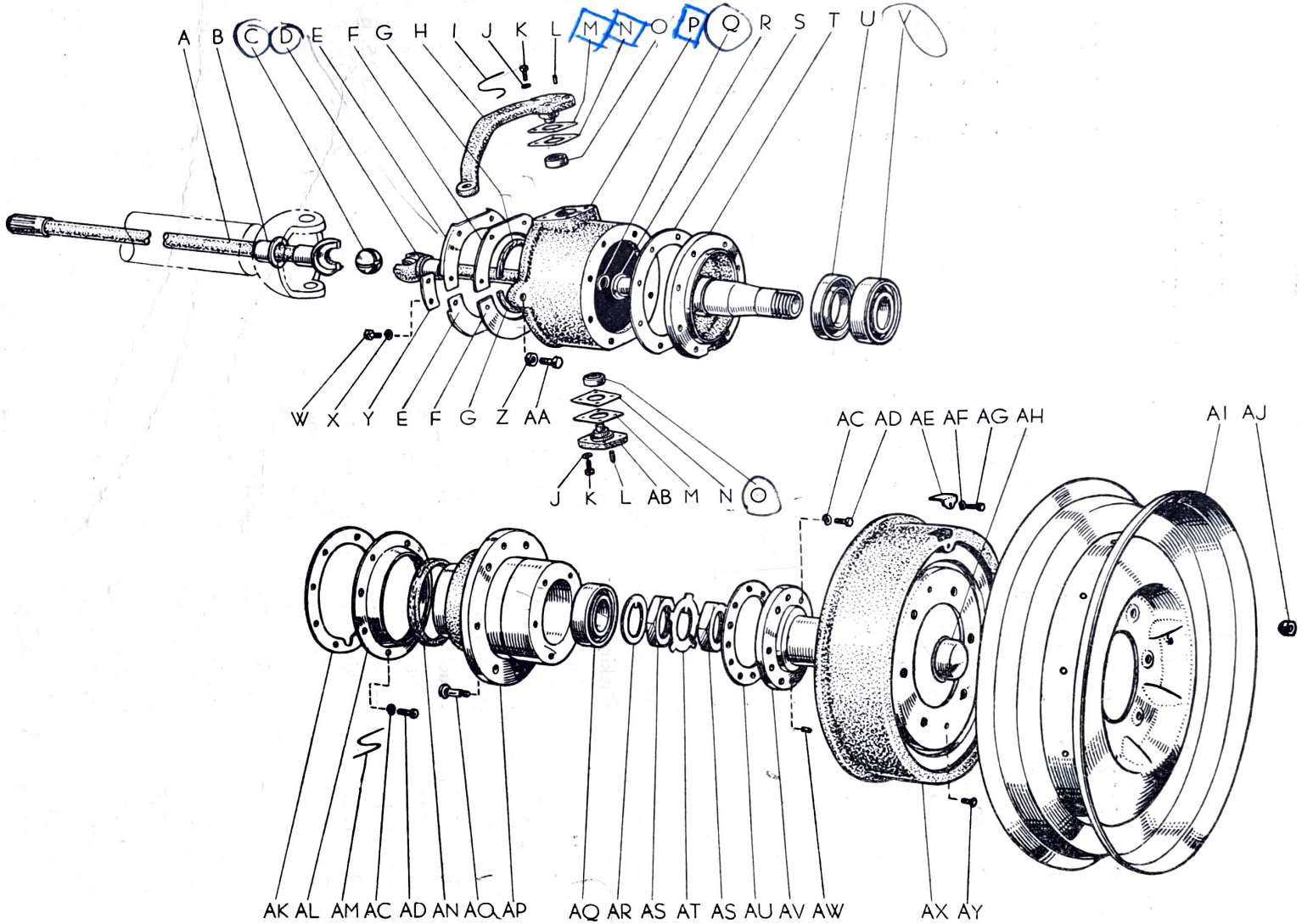

FRONT AXLE SHAFT, WHEEL HUB, BEARING, DRUM & DISC WHEEL

(FIG. 47)

KEY	PART NO.	PART NAME	PER CAR	MODEL
A	BJ 43312	Shaft, front axle L. H.	1	BJ25. BJ25L
	BJ 43311	Shaft, front axle R. H.	1	BJ25. BJ25L
B	BJ 43115	Bush, front axle shaft L. H.	1	BJ25. BJ25L
	BJ 43114	Bush, front axle shaft R. H.	1	BJ25. BJ25L
C	BJ 43351	Joint, front drive ball	2	BJ25. BJ25L
D	BJ 43313	Shaft, front drive	2	BJ25. BJ25L
E	BJ 43202	Steering knuckle oil retainer complete	4	BJ25. BJ25L
F	BJ 43223	Packing, steering knuckle oil retainer	4	BJ25. BJ25L
G	BJ 43222	Retainer, steering knuckle oil	4	BJ25. BJ25L
H	BJ 43214	Arm, steering knuckle L. H.	1	BJ25. BJ25L
	BJ 43213	Arm, steering knuckle R. H.	1	BJ25. BJ25L
I	BJ 43234	Wire, steering third & knuckle arm set bolt lock	8	BJ25. BJ25L
J	SWH 10	Washer, spring	16	
K	TBT 1030T	Bolt	16	
L	BJ 43236	Pin, steering knuckle knock	4	BJ25. BJ25L
M	BJ 43218	Packing, steering knuckle shaft	4	BJ25. BJ25L
N	BJ 43216	Shim, steering knuckle adjust	4	BJ25. BJ25L
	BJ 43217	Shim, steering knuckle adjust	4	BJ25. BJ25L
O	~~BRT 30203~~	Bearing, steering knuckle	4	BJ25. BJ25L
P	BJ 43212	Knuckle, steering L. H.	1	BJ25. BJ25L
	BJ 43211	Knuckle, steering R. H.	1	BJ25. BJ25L
Q	BJ 43318	Ring, front drive shaft snap	2	BJ25. BJ25L
R	BJ 43113	Bush, drive shaft	2	BJ25. BJ25L
S	BJ 43225	Packing, steering knuckle spindle	2	BJ25. BJ25L
	BJ 43203	Steering knuckle spindle complete (includes KEY—R, T of Fig.—47)	2	BJ25. BJ25L
T	BJ 43224	Spindle, steering knuckle	2	BJ25. BJ25L
U	BM 43415	Retainer, steering knuckle grease	2	BJ25. BJ25L
V	BRT 26820	Bearing, front wheel inner	2	BJ25. BJ25L
W	JBN 0612	Bolt	16	
X	SWH 06	Washer, spring	16	
Y	BJ 43229	Cover, steering knuckle dust	4	BJ25. BJ25L
Z	TNN 1210	Nut	2	
AA	BJ 43228	Bolt, steering knuckle stop adjust	2	BJ25. BJ25L
AB	BJ 43215	Shaft, steering knuckle	2	BJ25. BJ25L
AC	SWH 08	Washer, spring	28	
AD	TBK 0830T	Bolt	28	
AE	SB 47391	Strap, brake drum inspection hole	2	BJ25. BJ25L
AF	SWL 05	Washer, spring	2	
AG	44371	Bolt, front brake drum inspection hole cover	2	BJ25. BJ25L

KEY	PART NO.	PART NAME	PER CAR	MODEL
(FIG. 47)				
AH	BJ 43317	Cap, front drive shaft flange	2	BJ25. BJ25L
	BJ 44000	Wheel assembly	2	BJ25. BJ25L
	BJ 44101	Tire tube complete	2	BJ25. BJ25L
	BJ 44141	Tire (6.00—16—6ply)	2	BJ25. BJ25L
	BJ 44161	Tube (6.00—16)	2	BJ25. BJ25L
AI	BJ 44102	Disc wheel complete	2	BJ25. BJ25L
AJ	36114	Nut, axle	12	BJ25. BJ25L
AK	BJ 43227	Packing, steering knuckle spindle oil retainer	2	BJ25. BJ25L
AL	BJ 43205	Steering knuckle spindle oil retainer complete	2	BJ25. BJ25L
AM	BJ 43235	Wire, steering knuckle spindle set bolt lock	2	BJ25. BJ25L
AN	BJ 43233	Retainer, steering knuckle spindle oil	2	BJ25. BJ25L
AO	SB 42471	Bolt, axle hub	12	BJ25. BJ25L
AP	BJ 43412	Hub, front axle	2	BJ25. BJ25L
AQ	40515	Bearing, front wheel inner	2	BJ25. BJ25L
AR	BJ 43414	Washer, front wheel adjusting nut	2	BJ25. BJ25L
AS	BJ 43413	Nut, front wheel adjusting	4	BJ25. BJ25L
AT	BJ 43415	Washer, front wheel adjusting nut lock	2	BJ25. BJ25L
AU	BJ 43315	Packing, front drive shaft flange	2	BJ25. BJ25L
AV	BJ 43314	Flange, front drive shaft	2	BJ25. BJ25L
AW	BJ 43316	Knock, front drive shaft flange	4	BJ25. BJ25L
	BJ 43410	Front brake drum assembly (includes KEY—AJ, AO, AP, AX, AY of Fig.—47)	2	BJ25. BJ25L
AX	BJ 43401	Front brake drum complete	2	BJ25. BJ25L
AY	AE 3607	Screw, rear brake drum set	4	BJ25. BJ25L

SPACE FOR MEMO

FIG.—48 STEERING GEAR BOX & WHEEL

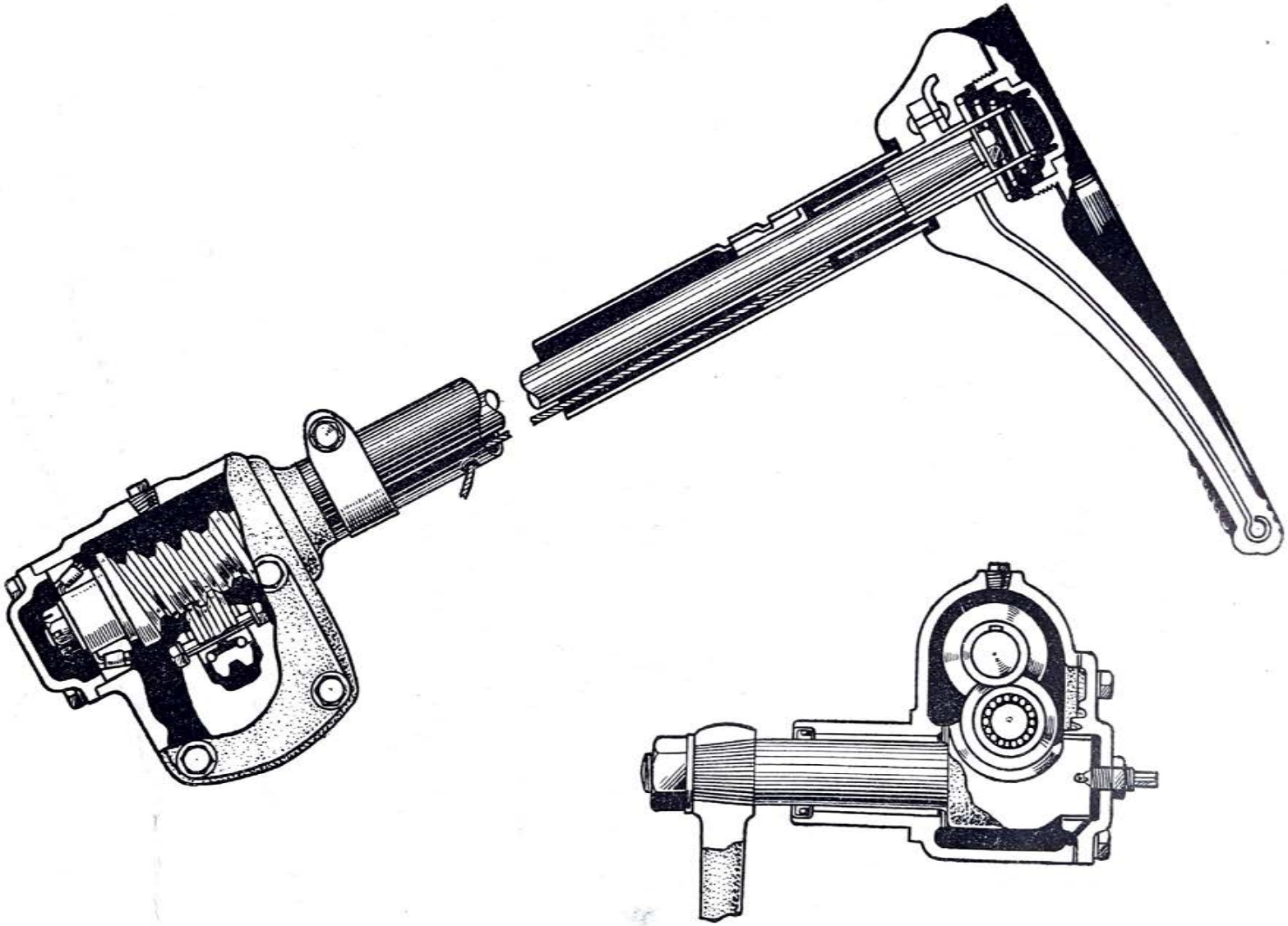

FIG.—49 STEERING GEAR BOX & WHEEL

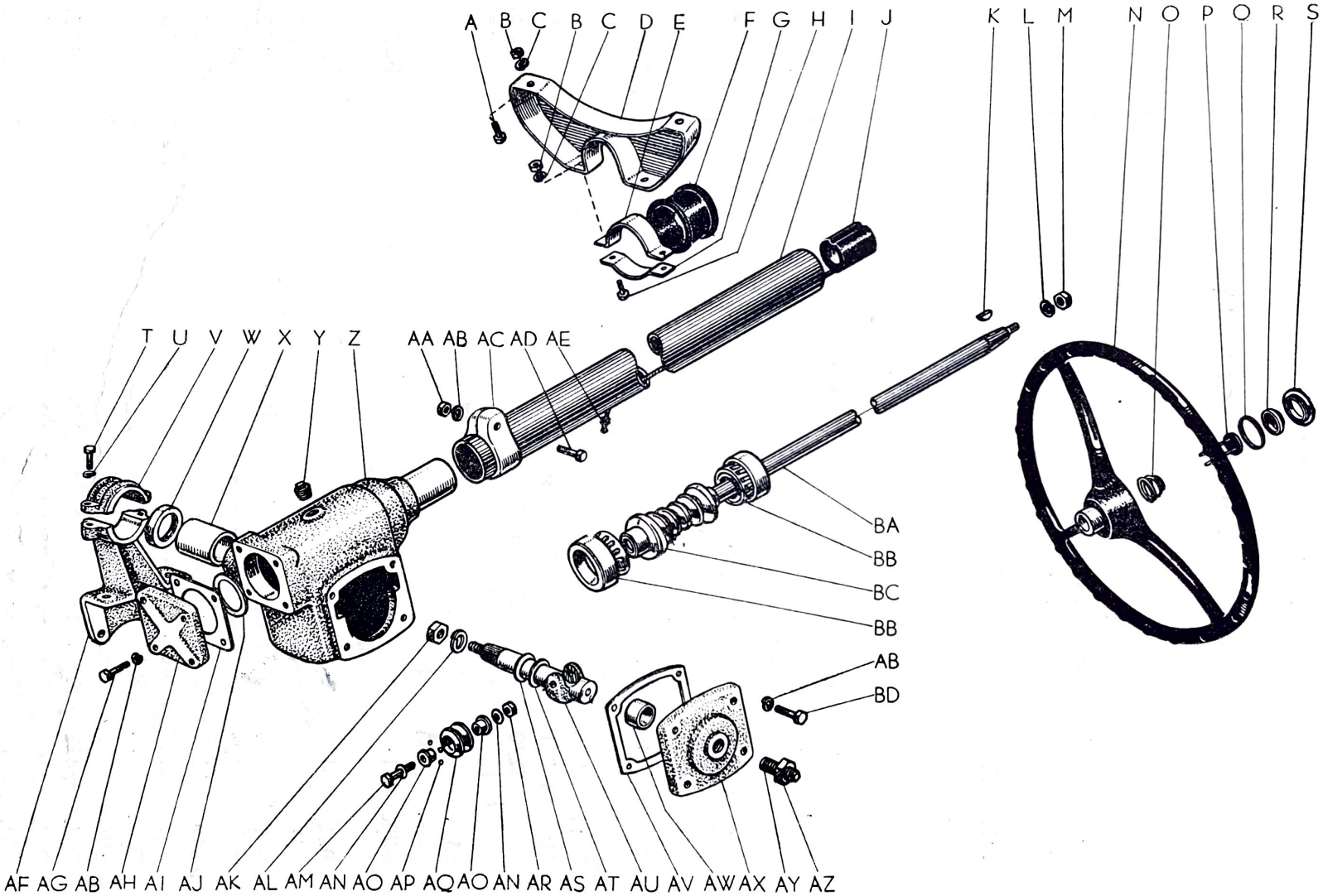

KEY	PART NO.	PART NAME	PER CAR	MODEL

STEERING ASSEMBLY

	2BJ 45000	Steering assembly (includes KEY—I~S, W~AE, AG~BD of Fig.—49)	1	BJ25
	BJ25L45000	Steering assembly	1	BJ25L
	2BJ 45100	Steering gear box assembly (includes KEY—I, J, W~AE, AG~BD of Fig.—49)	1	BJ25
	BJ25L45100	Steering gear box assembly	1	BJ25L

STEERING GEAR BOX & WHEEL

(FIG. 49)

A	TBN 0815Z	Bolt	2	
B	TNN 0806Z	Nut	2	
C	SWL 08Z	Washer, spring	4	
D	BJ25 53371	Stay, mast jacket clamp	1	BJ25
	BJ25L53371	Stay, mast jacket clamp	1	BJ25L
E	BJ25 53372	Clamp, mast jacket upper	1	BJ25. BJ25L
F	BJ 53373	Clamp gum, mast jacket	1	BJ25. BJ25L
G	BJ25 53373	Clamp, mast jacket lower	1	BJ25. BJ25L
H	TBN 0820Z	Bolt	2	
I	2BJ 45271	Jacket, steering mast	1	BJ25. BJ25L
J	BJ 45270	Mast jacket bushing assembly	1	BJ25. BJ25L
K	1424	Key, crankshaft & camshaft	1	BJ25. BJ25L
L	SWT 4013	Washer, spring	1	
M	LNN 1308	Nut	1	
	BJ25 45110	Steering wheel assembly (includes KEY—N~S of Fig.—49)	1	BJ25. BJ25L
N	BJ25 45101	Steering wheel complete	1	BJ25. BJ25L
O	BM 45133	Spring, horn button	1	BJ25. BJ25L
P	BM 45105	Steering needle wire complete	1	BJ25. BJ25L
Q	BM 45136	Packing, horn button stop	1	BJ25. BJ25L
R	BM 45131	Button, horn	1	BJ25. BJ25L
S	BM 45135	Stop, horn button	1	BJ25. BJ25L
T	TBK 1240	Bolt	2	
U	SWH 12	Washer, spring	2	
V	RKL 45412	Cap, steering gear box bracket	1	BJ25. BJ25L
W	RKL 45203	Retainer, steering sector shaft oil	1	BJ25. BJ25L
X	RKL 45212	Bush, sector shaft	1	BJ25. BJ25L
Y	RS 45245	Plug, steering gear box oil	1	BJ25. BJ25L
	2BJ 45201	Steering gear box complete (includes KEY—X, Z of Fig.—49)	1	BJ25
	RKL 45201	Steering gear box complete	1	BJ25L
Z	2BJ 45211	Box, steering gear	1	BJ25

KEY	PART NO.	PART NAME	PER CAR	MODEL
(FIG. 49)				
	RKL 45211	Box, steering gear	1	BJ25L
AA	TNN 0806	Nut	1	
AB	SWH 08	Washer, spring	9	
AC	4535	Clamp, mast jacket lower	1	BJ25. BJ25L
AD	TBN 0850	Bolt	1	
AE	45112	Cushion gum, mast jacket horn wire	1	BJ25. BJ25L
	2BJ 45401	Steering gear box bracket complete (includes KEY—T~V, AF of Fig.—49)	1	BJ25. BJ25L
AF	2BJ 45411	Bracket, steering gear box	1	BJ25. BJ25L
AG	TBK 0820	Bolt	4	
AH	RS 45231	Cap, steering worm bearing	1	BJ25. BJ25L
AI	RS 45232	Packing, steering worm bearing cap No. 1	some	BJ25. BJ25L
	RS 45233	Packing, steering worm bearing cap No. 2	some	BJ25. BJ25L
AJ	KB 4507	Shim, steering worm front bearing adjust (0~1ea of t=0.5 and some of t=0.1 & 0.2)	some	BJ25. BJ25L
AK	JNN 1913	Nut	1	
AL	SWH 19	Washer, spring	1	
AM	RS 45174	Shaft, steering sector roller	1	BJ25. BJ25L
AN	BM 45217	Shim, steering sector roller adjusting	2	BJ25. BJ25L
AO	RS 45173	Race, sector roller ball bearing inner	2	BJ25. BJ25L
AP	KB 45215	Ball, steering sector roller	20	BJ25. BJ25L
	RS 45102	Steering sector roller complete (includes KEY—AO~AQ of Fig.—49)	1	BJ25. BJ25L
AQ	RS 45172	Roller, steering sector	1	BJ25. BJ25L
AR	LNN 0805	Nut	1	
AS	RKL 45245	Shim, steering sector adjusting No. 1	0~2	BJ25. BJ25L
	RKL 45246	Shim, steering sector adjusting No. 2	0~2	BJ25. BJ25L
	RKL 45247	Shim, steering sector adjusting No. 3	0~2	BJ25. BJ25L
AT	RKL 45244	Plate, steering sector adjusting	1	BJ25. BJ25L
	2BJ 45170	Steering sector shaft assembly (includes KEY—AM~AR, AU of Fig.—49)	1	BJ25
	RKL 45170	Steering sector shaft assembly	1	BJ25L
AU	2BJ 45172	Shaft, steering sector	~~1~~	~~BJ25~~
	RKL 45171	Shaft, steering sector	1	BJ25L
AV	RS 45223	Packing, steering gear box	1	BJ25. BJ25L
AW	RKL 45242	Bush, sector shaft end cover	1	BJ25. BJ25L
	RKL 45202	Sector shaft end cover complete (includes KEY—AW, AX of Fig.—49)	1	BJ25. BJ25L
AX	RKL 45241	Cover, sector shaft end	1	BJ25. BJ25L
AY	RKL 45243	Screw, steering sector thrust	1	BJ25. BJ25L
AZ	LNN 1405T	Nut	1	
	2BJ 45101	Steering main shaft complete (includes KEY—BA, BC of Fig.—49)	1	BJ25
	BJ25L45101	Steering main shaft complete	1	BJ25L

KEY	PART NO.	PART NAME	PER CAR	MODEL
(FIG. 49)				
BA	2BJ 45171	Shaft, steering main	1	BJ25. BJ25L
BB	KB 4052	Bearing, steering worm front taper roller	2	BJ25. BJ25L
BC	2BJ 45152	Worm, steering	1	BJ25
	RS 45152	Worm, steering	1	BJ25L
BD	TBN 0820	Bolt	4	

FIG.—50 FLANGE PLATE & BRAKE SHOE

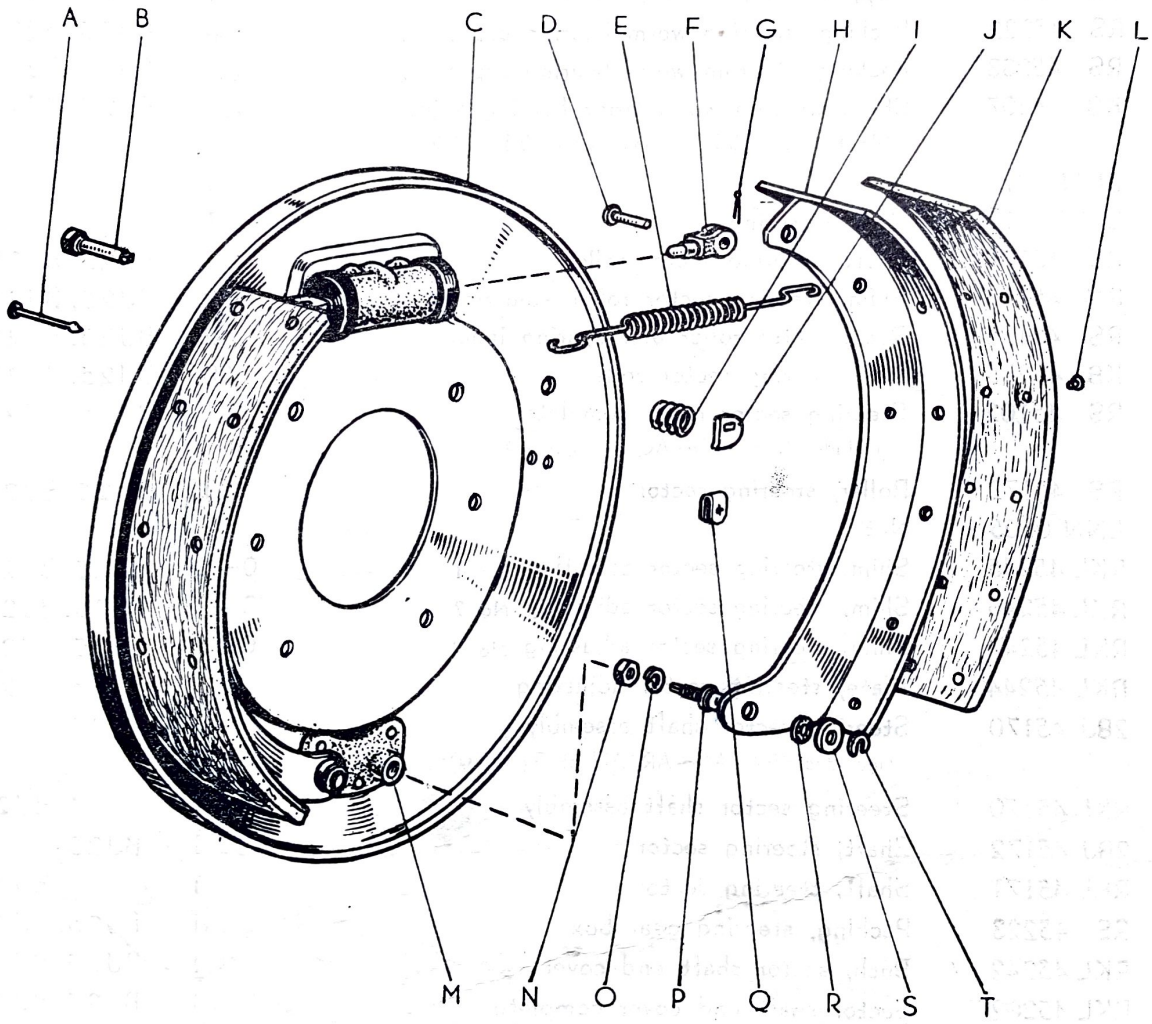

KEY	PART NO.	PART NAME	PER CAR	MODEL

B R A K E
FLANGE PLATE & BRAKE SHOE

(FIG. 50)

	BJ 47010	Front brake flange assembly (includes KEY—A~T of Fig.—50 and KEY—A~L of Fig.—51)	2	BJ25. BJ25L
	SB 47020	Rear brake flange assembly (includes KEY—A~T of Fig.—50 and KEY—A~I, K~O of Fig.—51)	2	BJ25. BJ25L
A	SB 47317	Pin, brake shoe rear shock stop	8	BJ25. BJ25L
B	SB 47313	Shaft, brake shoe adjusting cam	8	BJ25. BJ25L
	BJ 47301	Front brake flange complete	2	BJ25. BJ25L
	SB 47401	Rear brake flange complete (includes KEY—B, C, I, J, M of Fig.—50)	2	BJ25. BJ25L
C	BJ 47311	Flange, front brake	2	BJ25. BJ25L
	SB 42491	Plate, rear brake flange	2	BJ25. BJ25L
D	44104	Pin, wheel cylinber rod	8	BJ25. BJ25L
E	SB 47319	Spring, brake counter	4	BJ25. BJ25L
F	44123	Rod, wheel cylinder	8	BJ25. BJ25L
G	WP 1620	Pin, cotter	8	
	SB 47350	Brake shoe assembly (includes KEY—H, K, L of Fig.—50)	8	BJ25. BJ25L
H	SB 47302	Brake shoe complete	8	BJ25. BJ25L
I	SB 47314	Spring, brake shoe adjusting cam	8	BJ25. BJ25L
J	SB 47316	Cam, brake shoe adjusting R. H.	4	BJ25. BJ25L
	SB 47315	Cam, brake shoe adjusting L. H.	4	BJ25. BJ25L
K	4492	Lining, brake	8	BJ25. BJ25L
L	SB 47392	Rivet, brake shoe lining	96	BJ25. BJ25L
M	44216	Bearing, brake shoe adjusting pin	4	BJ25. BJ25L
N	TNN 1411	Nut	8	
O	SWH 14	Washer, spring	8	
P	44365	Pin, brake shoe adjusting	8	BJ25. BJ25L
Q	RK 47391	Supporter, brake shoe	8	BJ25. BJ25L
R	44218	Pin felt, brake shoe adjusting	8	BJ25. BJ25L
S	44217	Retainer, brake shoe adjusting pin	8	BJ25. BJ25L
T	44219	"C" Washer, brake shoe	8	BJ25. BJ25L

FIG.—51 WHEEL CYLINDER

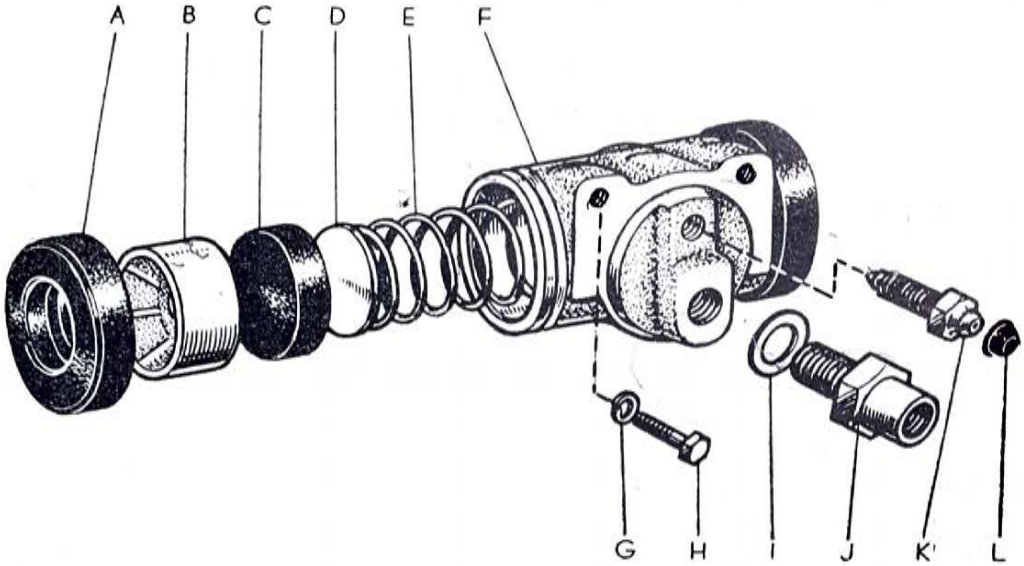

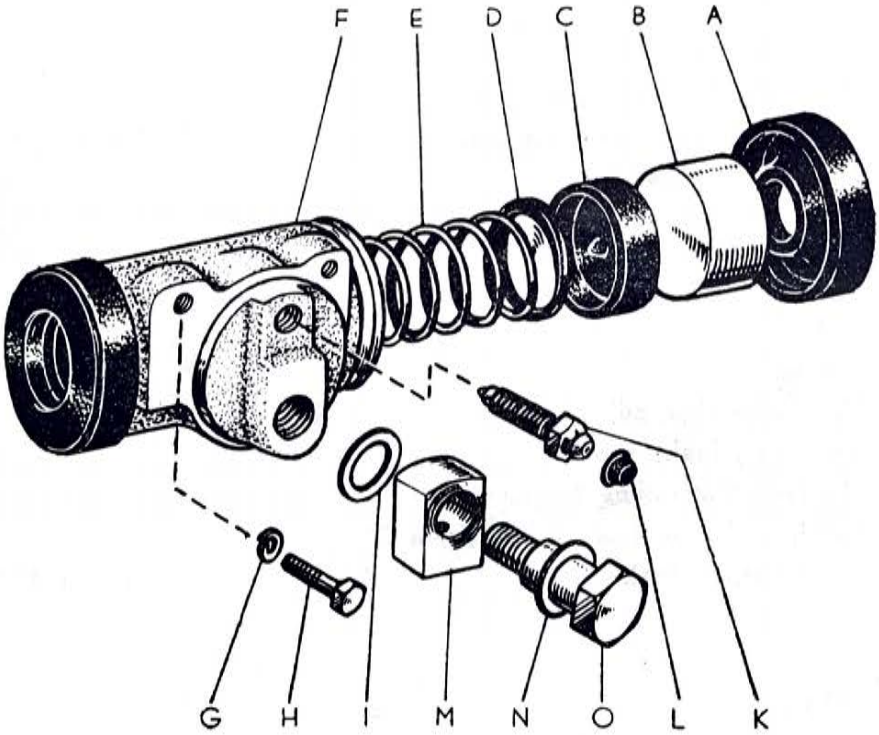

KEY	PART NO.	PART NAME	PER CAR	MODEL

WHEEL CYLINDER

(FIG. 51)

	BJ 47500	Front wheel cylinder assembly (includes KEY—A~F, I~L of Fig.—51)	2	BJ25. BJ25L
	BHR 47570	Rear wheel cylinder assembly (includes KEY—A~F, I, K~O of Fig.—51)	2	BJ25. BJ25L
A	44347- 5	Cover, wheel cylinder	8	BJ25. BJ25L
B	44347- 2	Piston, wheel cylinder	8	BJ25. BJ25L
C	RK 47572	Cup, wheel cylinder piston	8	BJ25. BJ25L
D	RK 47575	Seat, rear wheel cylinder spring	8	BJ25. BJ25L
	RK 47502	Rear wheel cylinder spring complete (includes KEY—D, E of Fig.—51)	4	BJ25. BJ25L
E	44347- 4	Spring, wheel cylinder	4	BJ25. BJ25L
F	44347- 1	Cylinder, wheel	4	BJ25. BJ25L
G	SWH 08	Washer, spring	8	
H	TBN 0815	Bolt	8	
I	44323-19	Packing, seat	4	BJ25. BJ25L
J	SB 47558	Joint, front wheel cylinder	2	BJ25. BJ25L
K	RK 47584	Plug, wheel cylinder bleeder	4	BJ25. BJ25L
L	RS 31491	Cap, bleeder plug rubber	4	BJ25. BJ25L
M	44324- 9	Union, rear wheel cylinder	2	BJ25. BJ25L
N	44324-10	Packing, rear wheel cylinder union bolt seat	2	BJ25. BJ25L
O	KB 4446	Bolt, master cylinder union	2	BJ25. BJ25L

OIL BRAKE PIPE & CLAMP

(FIG. 52)

A	RS 31488	Packing, union	2	BJ25. BJ25L
B	SKB 47203	Hose, rear oil brake flexible	3	BJ25. BJ25L
C	BJ 47223	Bushing, front brake flexible hose tension spring	2	BJ25. BJ25L
D	BJ 47222	Clamp, front brake flexible hose tension spring lower	2	BJ25. BJ25L
E	BJ 47219	Spring, front brake flexible hose tension	2	BJ25. BJ25L
	2BJ 47205	Oil brake pipe front R. H. complete (includes KEY—F, Y of Fig.—52)	1	BJ25. BJ25L
F	2BJ 47212	Pipe, oil brake front R. H.	1	BJ25. BJ25L
G	2BJ 47283	Clip, brake pipe	2	BJ25. BJ25L
H	44352	"4" Way, oil brake	1	BJ25. BJ25L
I	2BH 47283	Clamp, pipe No. 3	5	BJ25. BJ25L
	2BJ 47204	Oil brake pipe main complete (includes KEY—J, Z of Fig.—52)	1	BJ25
J	2BJ 47211	Pipe, oil brake main	1	BJ25
	2BJ 47207	Oil brake pipe intermediate complete (includes KEY—K, Y of Fig.—52)	1	BJ25. BJ25L
K	2BJ 47214	Pipe, oil brake intermediate	1	BJ25. BJ25L

FIG.—52 OIL BRAKE PIPE & CRAMP

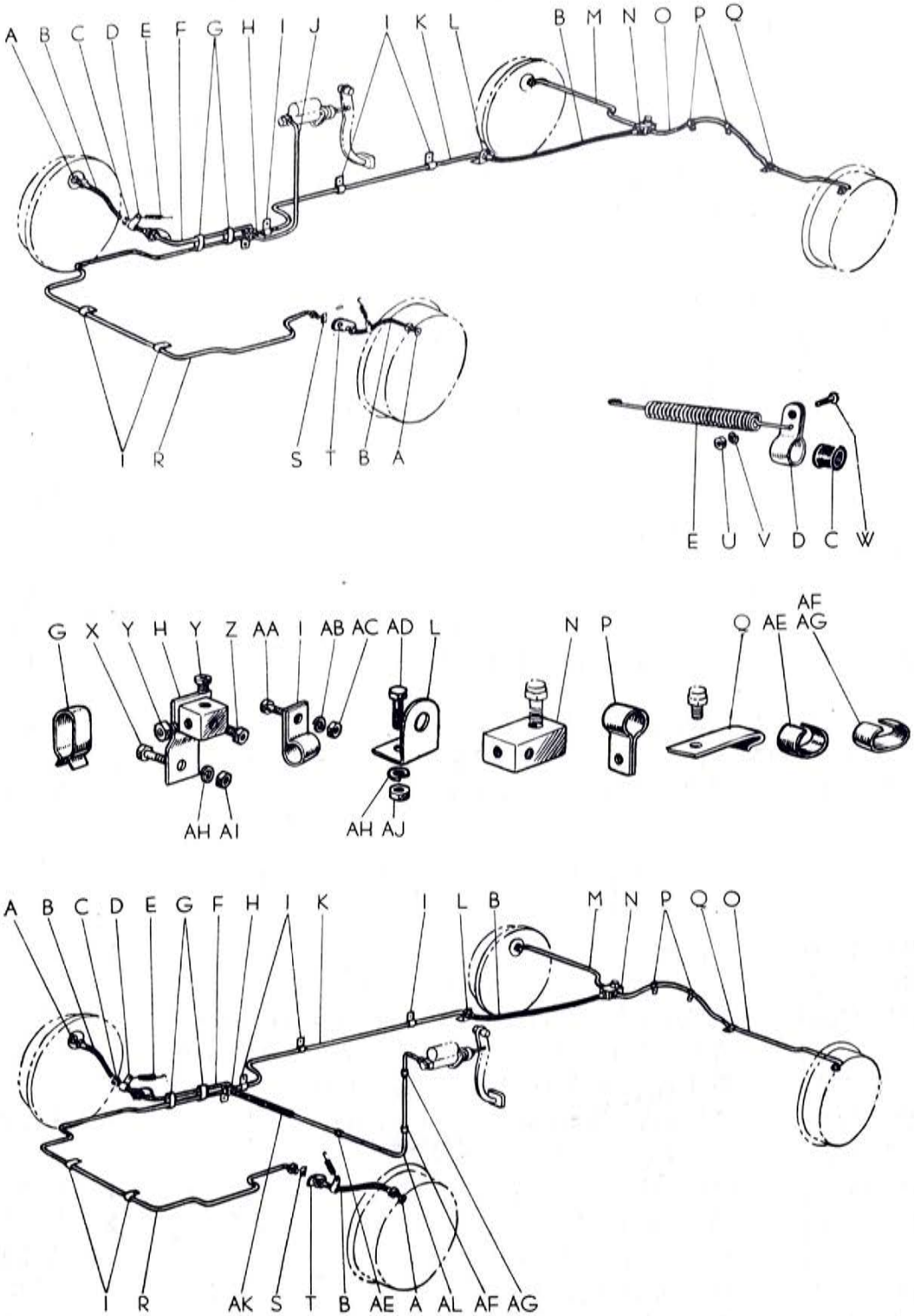

KEY	PART NO.	PART NAME	PER CAR	MODEL
(FIG. 52)				
L	SKB 47281	Union, brake hose set	1	BJ25. BJ25L
	SKB 47208	Oil brake pipe rear R. H. complete (includes KEY—M, Y of Fig.—52)	1	BJ25. BJ25L
M	SKB 47215	Pipe, oil brake rear R. H.	1	BJ25. BJ25L
N	44354	"3" Way, oil brake	1	BJ25. BJ25L
	SKB 47209	Oil brake pipe rear L. H. complete (includes KEY—O, Y of Fig.—52)	1	BJ25. BJ25L
O	SKB 47216	Pipe, oil brake rear L. H.	1	BJ25. BJ25L
P	SKB 47287	Clamp, pipe No. 4	2	BJ25. BJ25L
Q	SKB 47289	Clamp, pipe No. 5	1	BJ25. BJ25L
	2BJ 47206	Oil brake pipe front L. H. complete (includes KEY—R, Y of Fig.—52)	1	BJ25. BJ25L
R	2BJ 47213	Pipe, oil brake front L. H.	1	BJ25. BJ25L
S	RS 31473	Clip, flexible hose	3	BJ25. BJ25L
T	2BJ 47282	Plate, front flexible hose set L. H.	1	BJ25. BJ25L
	2BJ 47281	Plate, front flexible hose set R. H.	1	BJ25. BJ25L
U	JNT 0303	Nut	2	
V	SWH 03	Washer, spring	2	
W	MBN 0308	Bolt	2	
X	JBN 0815	Bolt	1	
Y	44356	Nut, oil brake pipe union (6.5mm)	10	BJ25. BJ25L
Z	44355	Nut, oil brake pipe union (8mm)	2	BJ25. BJ25L
AA	JBN 0612	Bolt	5	
AB	SWH 06	Washer, spring	5	
AC	JNN 0605	Nut	5	
AD	TBN 0815	Bolt	1	
AE	BJ25L47283	Clamp, pipe No. 2	1	BJ25L
AF	BJ25L47282	Clamp, pipe No. 1 L. H.	1	BJ25L
AG	BJ25L47281	Clamp, pipe No. 1 R. H.	1	BJ25L
AH	SWH 08	Washer, spring	2	
AI	JNN 0806	Nut	1	
AJ	TNN 0806	Nut	1	
AK	BJ25L47212	Room, oil brake pipe	1	BJ25L
	BJ25L47204	Oil brake pipe main complete (includes KEY—Z, AK, AL of Fig.—52)	1	BJ25L
AL	BJ25L47211	Pipe, oil brake main	1	BJ25L

FIG.—53 FRONT SPRING

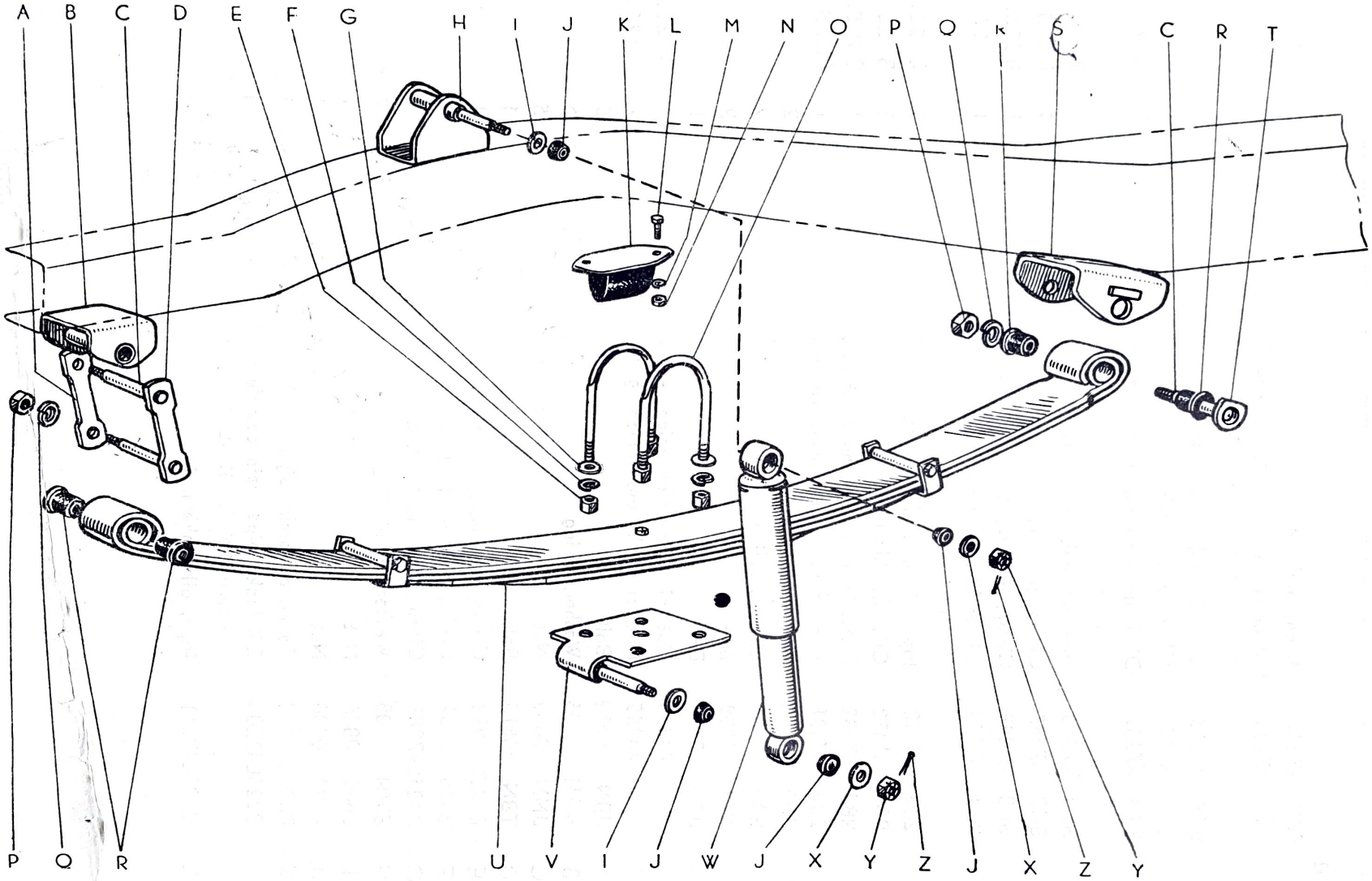

FRONT SPRING & SHOCK ABSORBER

(FIG. 53)

KEY	PART NO.	PART NAME	PER CAR	MODEL
A	RS 48331	Shackle, rear spring	2	BJ25. BJ25L
B	2BJ 51301	Front & rear spring hanger complete	2	BJ25. BJ25L
C	2BJ 48311	Pin, hanger & shackle	6	BJ25. BJ25L
	2BJ 48304	Spring shackle complete (includes KEY—C, D of Fig.—53)	2	BJ25. BJ25L
D	RS 48332	Plate, rear spring shackle	2	BJ25. BJ25L
E	TNN 1311	Nut	8	
F	SWH 13	Washer, spring	8	
G	PWL 4013	Washer, plate	8	
H	2BJ 48501	Front shock absorber upper bracket complete	2	BJ25. BJ25L
I	KB 4125	Washer, engine rear support bolt	4	BJ25. BJ25L
J	SA 48586	Bushing, shock absorber pivot pin	8	BJ25. BJ25L
K	RS 48505	Rear cushion gum complete	2	BJ25. BJ25L
L	TBN 0825	Bolt	4	
M	SWH 08	Washer, spring	4	
N	TNN 0806	Nut	4	
O	2BJ 48361	"U" Bolt, spring	3	BJ25. BJ25L
	2BJ 48362	"U" Bolt, front spring R.H. inner	1	BJ25. BJ25L
P	TNN 1008	Nut	6	
Q	SWH 10	Washer, spring	6	
R	2BJ 48261	Bush, spring eye	12	BJ25. BJ25L
S	2BJ 51302	Front spring rear hanger complete	2	BJ25. BJ25L
	2BJ 48303	Hanger pin complete (includes KEY—C, T of Fig.—53)	2	BJ25. BJ25L
T	RR 48312	End, rear spring front hanger spring support	2	BJ25. BJ25L
U	2BJ 48101	Front spring complete	2	BJ25. BJ25L
V	2BJ 48305	Front spring "U" bolt seat complete L.H.	1	BJ25. BJ25L
	2BJ 48302	Front spring "U" bolt seat complete R.H.	1	BJ25. BJ25L
W	2BJ 48510	Front shock absorber assembly	2	BJ25. BJ25L
X	PWL 5016	Washer, plate	4	
Y	CNN 1311	Nut	4	
Z	WP 3025	Pin, cotter	4	

FIG.—54 REAR SPRING

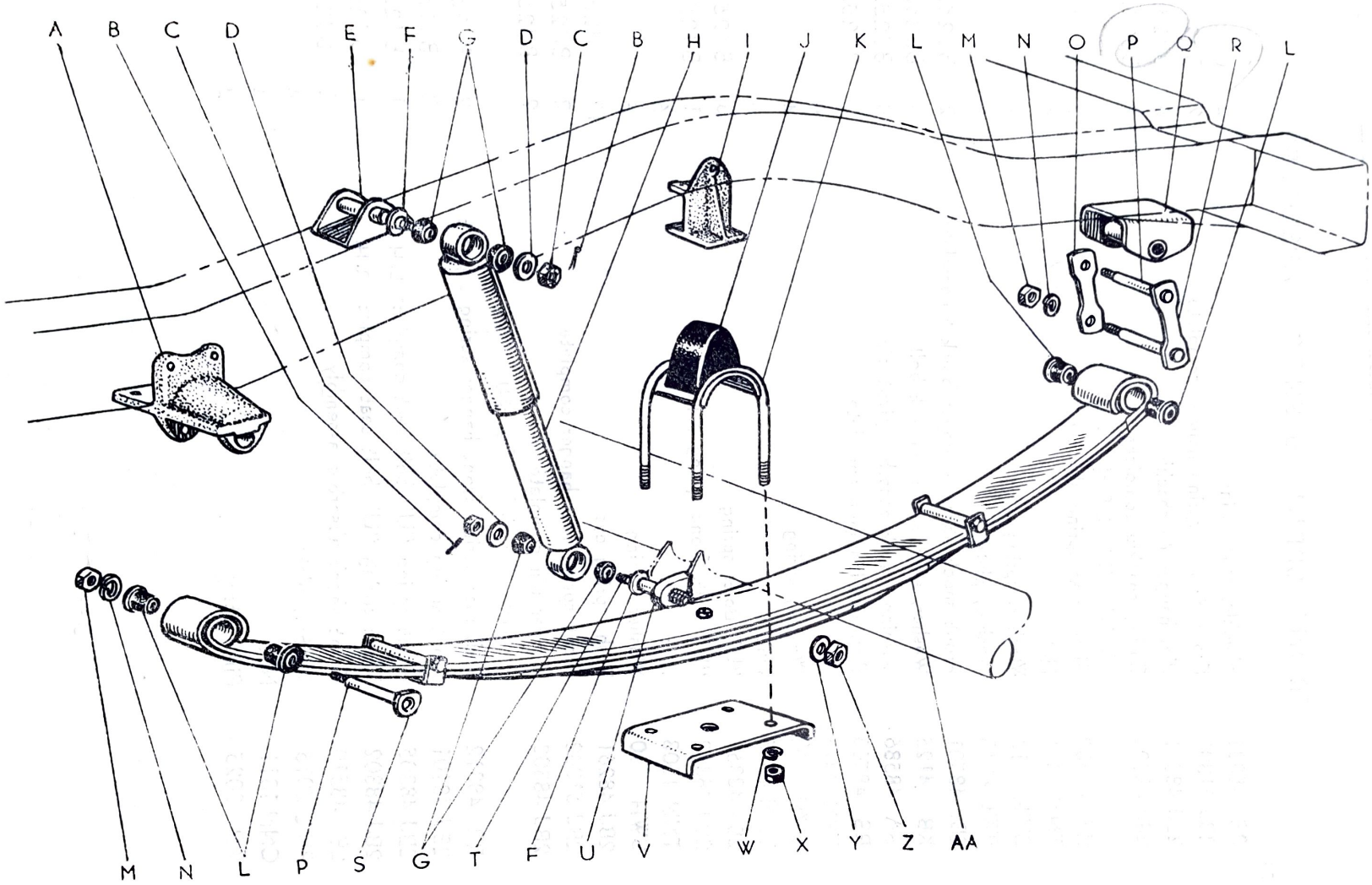

KEY	PART NO.	PART NAME	PER CAR	MODEL

REAR SPRING & SHOCK ABSORBER

(FIG. 54)

A	2BJ 51376	Hanger, rear spring front L. H.	1	BJ25. BJ25L
	2BJ 51375	Hanger, rear spring front R. H.	1	BJ25. BJ25L
B	WP 3025	Pin, cotter	4	
C	CNN 1311	Nut	4	
D	PWL 5016	Washer, plate	4	
E	2BJ 48502	Rear shock absorber upper bracket complete	2	BJ25. BJ25L
F	KB 4125	Washer, engine rear support bolt	4	BJ25. BJ25L
G	SA 48586	Bushing, shock absorber pivot pin	8	BJ25. BJ25L
H	2BH 48520	Rear shock absorber assembly	2	BJ25. BJ25L
I	2BJ 51379	Stopper, rear spring cushion L. H.	1	BJ25. BJ25L
	2BJ 51378	Stopper, rear spring cushion R. H.	1	BJ25. BJ25L
J	2BJ 48301	Cushion gum complete	2	BJ25. BJ25L
K	2BJ 48361	"U" Bolt, spring	4	BJ25. BJ25L
L	2BJ 48261	Bush, spring eye	12	BJ25. BJ25L
M	TNN 1008	Nut	6	
N	SWH 10	Washer, spring	6	
O	RS 48331	Shackle, rear spring	2	BJ25. BJ25L
P	2BJ 48311	Pin, hanger & shackle	6	BJ25. BJ25L
Q	2BJ 51301	Front & rear spring hanger complete	2	BJ25. BJ25L
	2BJ 48304	Spring shackle complete (includes KEY—P, R of Fig.—54)	2	BJ25. BJ25L
R	RS 48332	Plate, rear spring shackle	2	BJ25. BJ25L
	2BJ 48303	Hanger pin complete (includes KEY—P, S of Fig.—54)	2	BJ25. BJ25L
S	RR 48312	End, rear spring front hanger spring support	2	BJ25. BJ25L
T	2BJ 48523	Pin, rear shock absorber lower pivot	2	BJ25. BJ25L
U	2BJ 48525	Arm, rear shock absorber lower pivot	2	BJ25. BJ25L
V	2BJ 48374	Seat, rear spring "U" bolt	2	BJ25. BJ25L
W	SWH 13	Washer, spring	8	
X	TNN 1311	Nut	8	
Y	SWL 16	Washer, spring	2	
Z	TNN 1613	Nut	2	
AA	2BJ 48102	Rear spring complete	2	BJ25. BJ25L

FIG.—55 FRAME & BUMPER

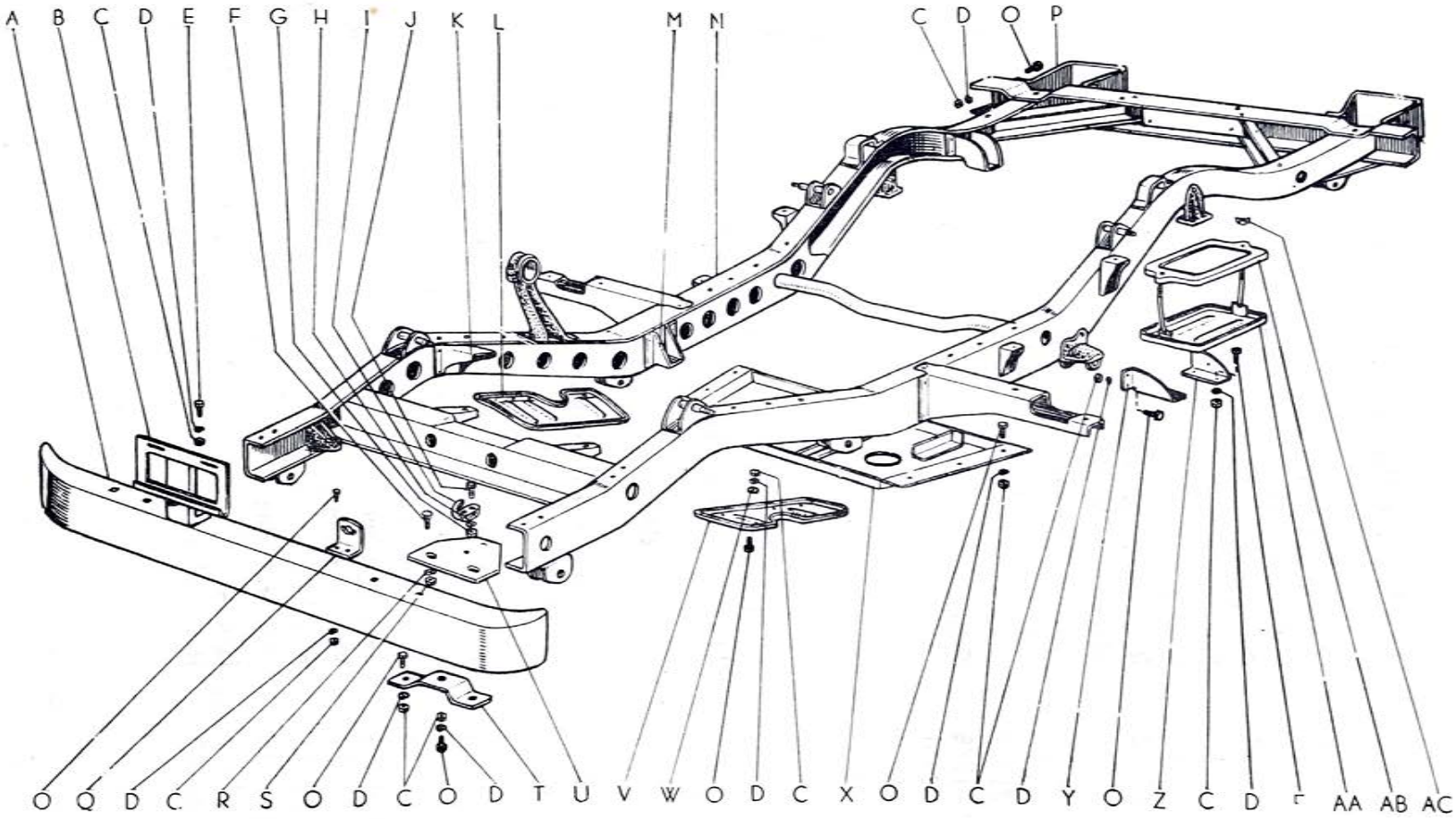

KEY	PART NO.	PART NAME	PER CAR	MODEL

FRAME & BUMPER

	BJ20 51100	Frame assembly (includes KEY—A of Fig.—46 and KEY—T~V, AF of Fig.—49 and KEY—B, H, S of Fig.—53 and KEY—A, E, I, Q of Fig.—54 and KEY—A, C, D, F~K, M~U, X of Fig.—55)	1	BJ25
	BJ25L51100	Frame assembly	1	BJ25L
(FIG. 55)				
A	BJ20 51311	Bumper, front	1	BJ25. BJ25L
B	BJ20 51402	Front number bracket complete	1	BJ25. BJ25L
C	TNN 0806	Nut	38	
D	SWH 08	Washer, spring	38	
E	TBN 0815	Bolt	6	
F	BJ20 51313	Bolt, bumper set	4	BJ25. BJ25L
G	TNN 1210	Nut	4	
H	SWH 12	Washer, spring	4	
I	SB 51127	Hook	2	BJ25. BJ25L
J	TBK 1245	Bolt	4	
K	BJ20 51211	Bracket, engine front support R. H.	1	BJ25. BJ25L
	BJ20 51212	Bracket, engine front support L. H.	1	BJ25. BJ25L
L	BJ20 51331	Cover, engine room under R. H.	1	BJ25. BJ25L
M	BJ20 51213	Bracket, engine rear support R. H.	1	BJ25. BJ25L
	BJ20 51214	Bracket, engine rear support L. H.	1	BJ25. BJ25L
N	BJ20 51101	Frame complete	1	BJ25. BJ25L
O	TBN 0820	Bolt	32	
P	BJ20 51315	Bumper, rear R. H.	1	BJ25. BJ25L
	BJ20 51316	Bumper, rear L. H.	1	BJ25. BJ25L
Q	BJ20 51215	Guide, starting handle front	1	BJ25. BJ25L
R	SWH 10	Washer, spring	4	
S	TNN 1008	Nut	4	
T	BJ 51313	Stay, front bumper under	2	BJ25. BJ25L
U	BJ20 51312	Gusset, front bumper	2	BJ25. BJ25L
V	BJ20 51332	Cover, engine room under L. H.	1	BJ25
	BJ25L51332	Cover, engine room under L. H.	1	BJ25L
W	PWL 2508	Washer, plate	6	
X	BJ20 51304	Mission under cover complete	1	BJ25. BJ25L
Y	BJ20 51351	Hanger, battery bracket front	1	BJ25. BJ25L
Z	BJ20 51352	Hanger, battery bracket rear	1	BJ25. BJ25L
AA	BJ20 51306	Battery bracket complete	1	BJ25. BJ25L
AB	BJ 53134	Plate, battery set	1	BJ25. BJ25L
AC	BJ 66753	Nut, wing	2	BJ25. BJ25L

KEY	PART NO.	PART NAME	PER CAR	MODEL

PINTLE HOOK

(FIG. 56)			1	BJ25. BJ25L
	BJ 51900	Pintle hook assembly (includes KEY—A~D, F~H, J of Fig.—56)	2	BJ25. BJ25L
A	BJ 51916	Pin, pintle hook	1	BJ25. BJ25L
B	BJ 51912	Lock, pintle hook	1	BJ25. BJ25L
C	BJ 51914	Spring, pintle hook	1	BJ25. BJ25L
D	BJ 51913	Latch, pintle hook	2	
E	TBN 1240	Bolt	5	
F	SWH 12	Washer, spring	5	
G	TNN 1210	Nut	1	
H	TBK 1250	Bolt	2	BJ25. BJ25L
I	BJ 51915	Eyelet, pintle hook	1	BJ25. BJ25L
J	BJ 51911	Body, pintle hook		

FIG.—56 PINTLE HOOK

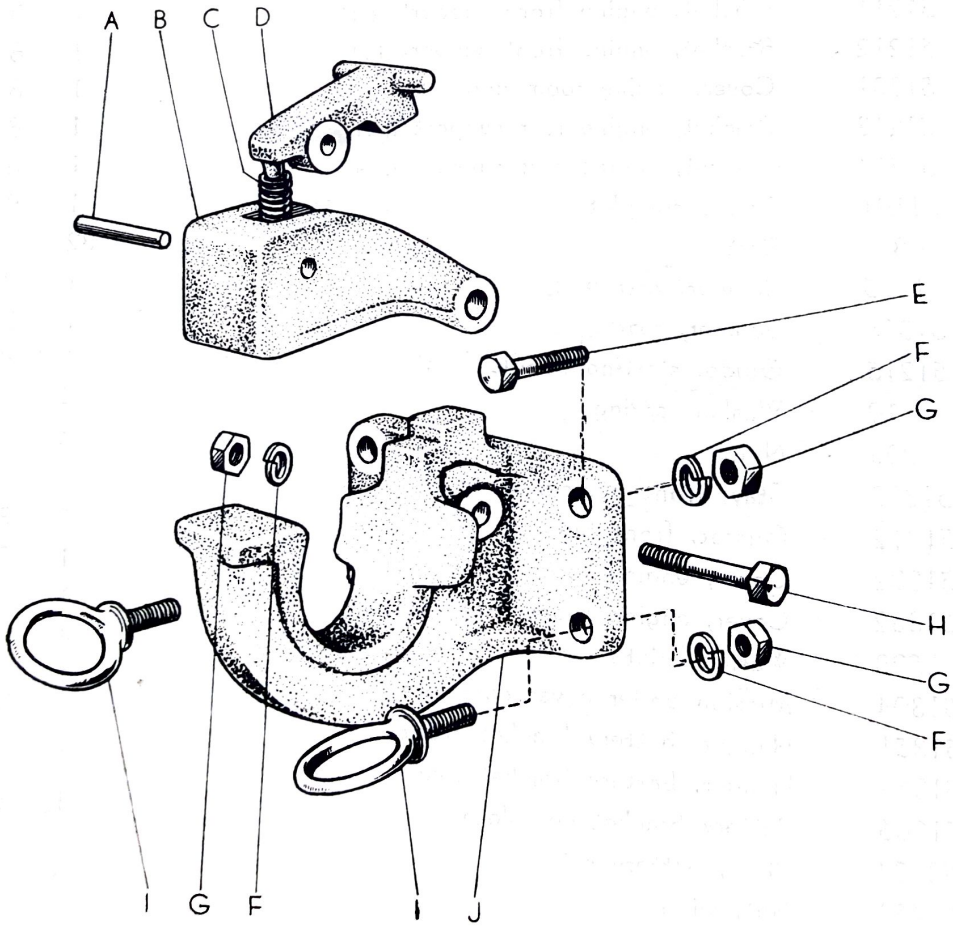

SHEET METAL GROUP

INSTRUMENT GROUP

ELECTRICAL GROUP

B O D Y GROUP

FIG.—57 SHEET METAL & MARK

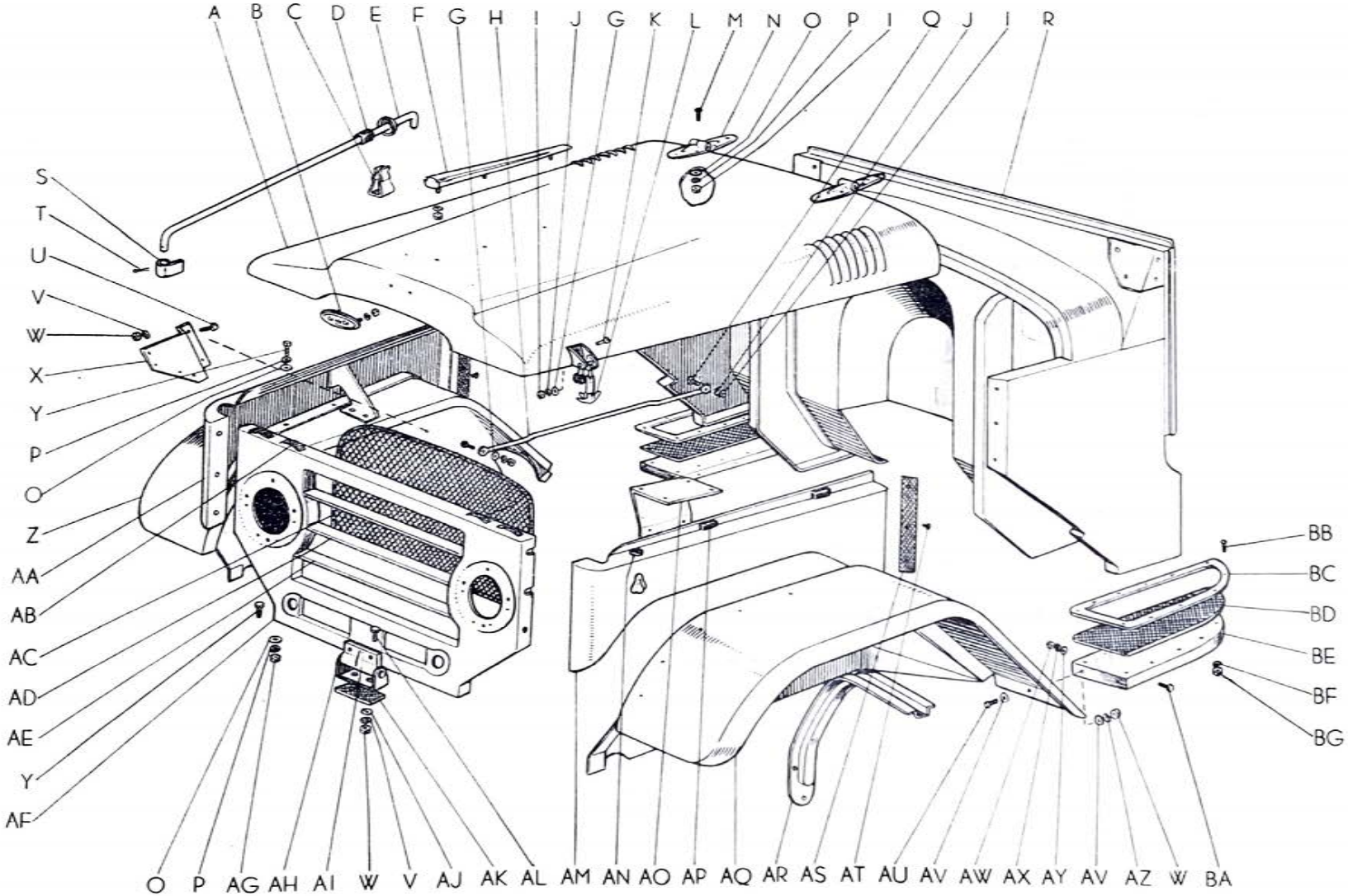

KEY	PART NO.	PART NAME	PER CAR	MODEL

SHEET METAL & MARK

BONNET COVER & STAY
RADIATOR COVER & GRILLE
FRONT FENDER & STEP

(FIG. 57)

	BJ25 52210	Bonnet cover assembly (includes KEY—A, B, F, I~P of Fig.—57)	1	BJ25. BJ25L
A	BJ25 52201	Bonnet cover complete	1	BJ25. BJ25L
B	BJ25 59102	Top mark complete	1	BJ25. BJ25L
C	BJ25 52244	Catch, bonnet stay	1	
D	RK 52225	Cusion gum, bonnet stay	1	BJ25. BJ25L
E	BJ25 52204	Bonnet stay complete	1	BJ25. BJ25L
F	BJ25 59103	Mascot complete	1	BJ25. BJ25L
G	PWL 2006	Washer, plate	5	
H	BJ25 51421	Rod, radiator brace	1	BJ25. BJ25L
I	JNT 0605	Nut	18	
J	SWL 06	Washer, spring	6	
K	RS 81112	Screw, bonnet catch set	4	BJ25. BJ25L
L	BJ25 52203	Bonnet cover catch complete	4	BJ25. BJ25L
M	BJ25 52253	Screw, bonnet hinge set	12	BJ25. BJ25L
N	BJ25 52205	Bonnet hinge complete	2	BJ25. BJ25L
O	PWL 2006Z	Washer, plate	28	
P	SWL 06Z	Washer, spring	28	
Q	JBN 0615	Bolt	2	
R	BJ25 53110	Cowl assembly	1	BJ25
	BJ25L53110	Cowl assembly	1	BJ25L
S	SG 52223	Bracket, bonnet stay	1	BJ25. BJ25L
T	WP 2015	Pin, cotter	1	
U	TBN 0815Z	Bolt	2	
V	SWH 08	Washer, spring	4	
W	TNN 0806	Nut	12	
X	BJ27 58611	Bracket, horn	1	BJ25. BJ25L
Y	JBN 0615Z	Bolt	16	
	BJ25 52510	Front fender assembly R. H. (includes KEY—O, P, U~AA, AN, AP, AR~AT of Fig.—57)	1	BJ25. BJ25L
Z	BJ25 52501	Front fender complete R. H.	1	BJ25. BJ25L
AA	BJ25 52105	Hood side panel complete R. H.	1	BJ25. BJ25L
AB	BJ25 52115	Shim, radiator cover cushion	4	BJ25. BJ25L
AC	BJ25 52124	Net, radiator grille	1	BJ25. BJ25L
AD	BJ25 52103	Radiator grille center complete	1	BJ25. BJ25L
AE	BJ25 52102	Radiator grille bar complete	2	BJ25. BJ25L
	BJ25 52110	Radiator cover assembly (includes KEY—AB~AF, AH, AI of Fig.—57)	1	BJ25. BJ25L
AF	BJ25 52101	Radiator cover complete	1	BJ25. BJ25L

KEY	PART NO.	PART NAME	PER CAR	MODEL
(FIG. 57)				
AG	JNT 0605Z	Nut	4	
AH	BJ25 52104	Radiator cover support hinge bracket complete	1	BJ25. BJ25L
AI	BJ25 52141	Hinge, radiator cover support	1	BJ25. BJ25L
AJ	PWH 2508	Washer, plate	2	
AK	BJ25 52145	Shim, radiator cover support hinge bracket	1	BJ25. BJ25L
AL	TBK 0830	Bolt	2	
AM	BJ25 52106	Hood side panel complete L. H.	1	BJ25. BJ25L
AN	GCG 0520	Cushion gum	2	BJ25. BJ25L
AO	BJ25 18311	Bracket, voltage regulator	1	BJ25. BJ25L
AP	BJ25 52157	Cushion, bonnet cover side	4	BJ25. BJ25L
	BJ25 52520	Front fender assembly L. H. (includes KEY—AM~AT of Fig.—57)	1	BJ25. BJ25L
AQ	BJ25 52502	Front fender complete L. H.	1	BJ25. BJ25L
AR	BJ25 52532	Stay, front fender L. H.	1	BJ25. BJ25L
	BJ25 52531	Stay, front fender R. H.	1	BJ25. BJ25L
AS	BJ25 52156	Shim, food side panel cushion	2	BJ25. BJ25L
AT	BM 81415	Pin, shroud ventilator packing	6	BJ25. BJ25L
AU	TBN 0815	Bolt	8	
AV	PWL 2508	Washer, plate	16	
AW	TNN 1008	Nut	2	
AX	SWL 10	Washer, spring	2	
AY	PWL 0010	Washer, plate	2	
AZ	SWL 08	Washer, spring	8	
BA	BJ 52554	Bolt, step set	2	BJ25. BJ25L
BB	MBN 0515Z	Bolt	20	
BC	BJ25 52552	Retainer, step mat L. H.	1	BJ25. BJ25L
	BJ25 52551	Retainer, step mat R. H.	1	BJ25. BJ25L
BD	BJ25 52554	Mat, step L. H.	1	BJ25. BJ25L
	BJ25 52553	Mat, step R. H.	1	BJ25. BJ25L
BE	BJ25 52506	Step complete L. H.	1	BJ25. BJ25L
	BJ25 52505	Step complete R. H.	1	BJ25. BJ25L
BF	SWL 05	Washer, spring	20	
BG	JNT 0504	Nut	20	

INSTRUMENT PANEL, METER & SWITCH

(FIG. 58)				
A	BJ25 53302	Instrument panel glove box rid complete	1	BJ25. BJ25L
B	BJ25 53321	Knob, instrument panel pocket	1	BJ25. BJ25L
C	BJ25 53322	Grip, hand	1	BJ25. BJ25L
D	BX 53344	Claw, instrument panel pocket cover	1	BJ25. BJ25L
E	SWH 04	Washer, spring	1	
F	JNT 0404	Nut	1	

FIG.—58 INSTRUMENT PANEL & METER

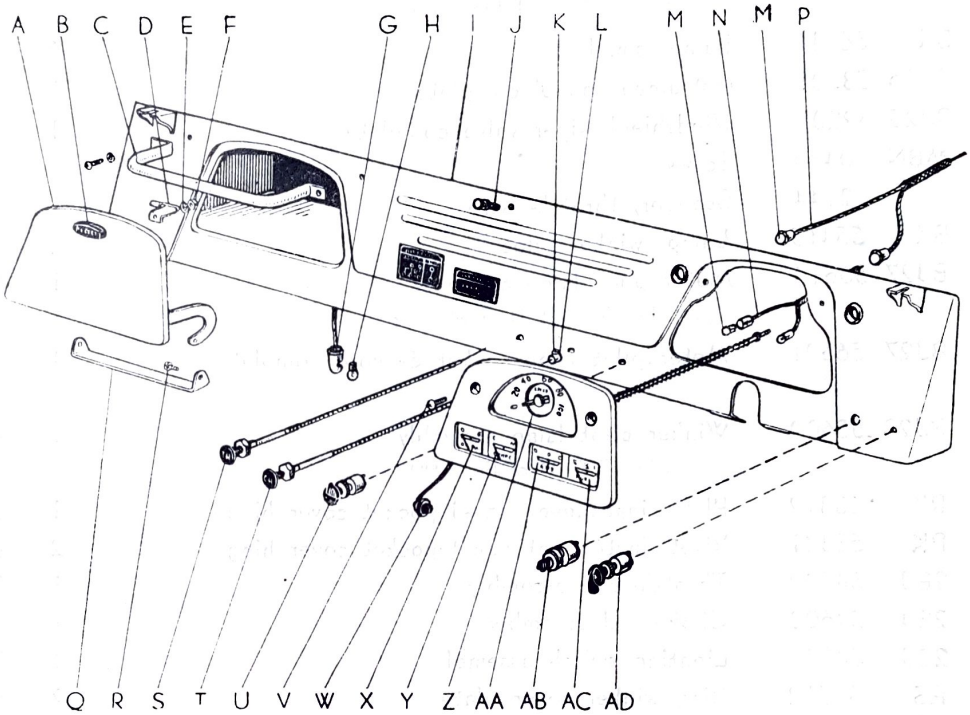

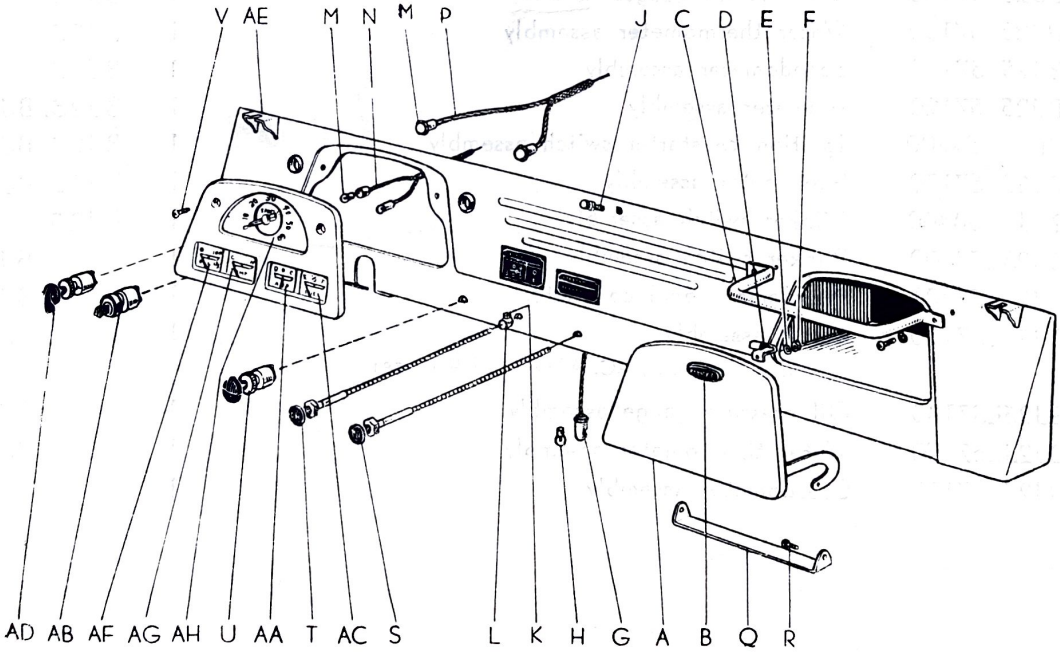

KEY	PART NO.	PART NAME	PER CAR	MODEL
(FIG. 58)				
G	BJR 55300	Dash lamp assembly (includes KEY—H of Fig.—58)	1	BJ25. BJ25L
H	BX 56311	Lamp, small	1	BJ25. BJ25L
I	BJ25 53301	Instrument panel complete	1	BJ25
J	BJ25 59201	Windshield wiper valve complete	1	BJ25. BJ25L
K	MBN 0410	Screw	1	
L	2144	Stopper, throttle wire	1	BJ25. BJ25L
M	BX 55415	Lamp, winker pilot	4	BJ25. BJ25L
	BJ27 56610	Meter pilot lamp assembly (includes KEY—M, N of Fig.—58)	1	BJ25. BJ25L
N	BJ27 56601	Meter pilot lamp socket & cord complete	1	BJ25. BJ25L
P	BJ20 55600	Winker pilot lamp assembly (includes KEY—M of Fig.—58)	1	BJ25. BJ25L
Q	RK 53319	Plate, instrument panel pocket cover hinge	1	BJ25. BJ25L
R	RK 53321	Rivet, instrument panel pocket cover hinge	2	BJ25. BJ25L
S	2BJ 54500	Throttle rod assembly	1	BJ25. BJ25L
T	2BJ 54600	Choke rod assembly	1	BJ25. BJ25L
U	2BJ 54100	Lighting switch assembly	1	BJ25. BJ25L
V	RS 63512	Biss, winker cover plate	2	BJ25. BJ25L
W	RK 57601	Oil pressure gauge unit	1	BJ25
	BJ25 57100	Meter assembly (includes KEY—X~AA, AC of Fig.—58)	1	BJ25
X	BJ25 57140	Oil pressure gauge assembly	1	BJ25
Y	BJ25 57150	Water thermometer assembly	1	BJ25
Z	BJ25 57110	Speedometer assembly	1	BJ25
AA	BJ25 57120	Ammeter assembly	1	BJ25. BJ25L
AB	RR 54200	Ignition & starter switch assembly	1	BJ25. BJ25L
AC	BJ25 57130	Fuel meter assembly	1	BJ25. BJ25L
AD	2BJ 54400	Winker switch assembly	1	BJ25
	BJ25L54400	Winker switch assembly	1	BJ25L
AE	BJ25L53301	Instrument panel complete	1	BJ25L
	BJ25L57100	Meter assembly (includes KEY—AA, AC, AF~AH of Fig.—58)	1	BJ25L
AF	BJ25L57140	Oil pressure gauge assembly	1	BJ25L
AG	BJ25L57150	Water thermometer assembly	1	BJ25L
AH	BJ25L57110	Speedometer assembly	1	BJ25L

FIG.—59 WIRE HARNESS & CLAMP

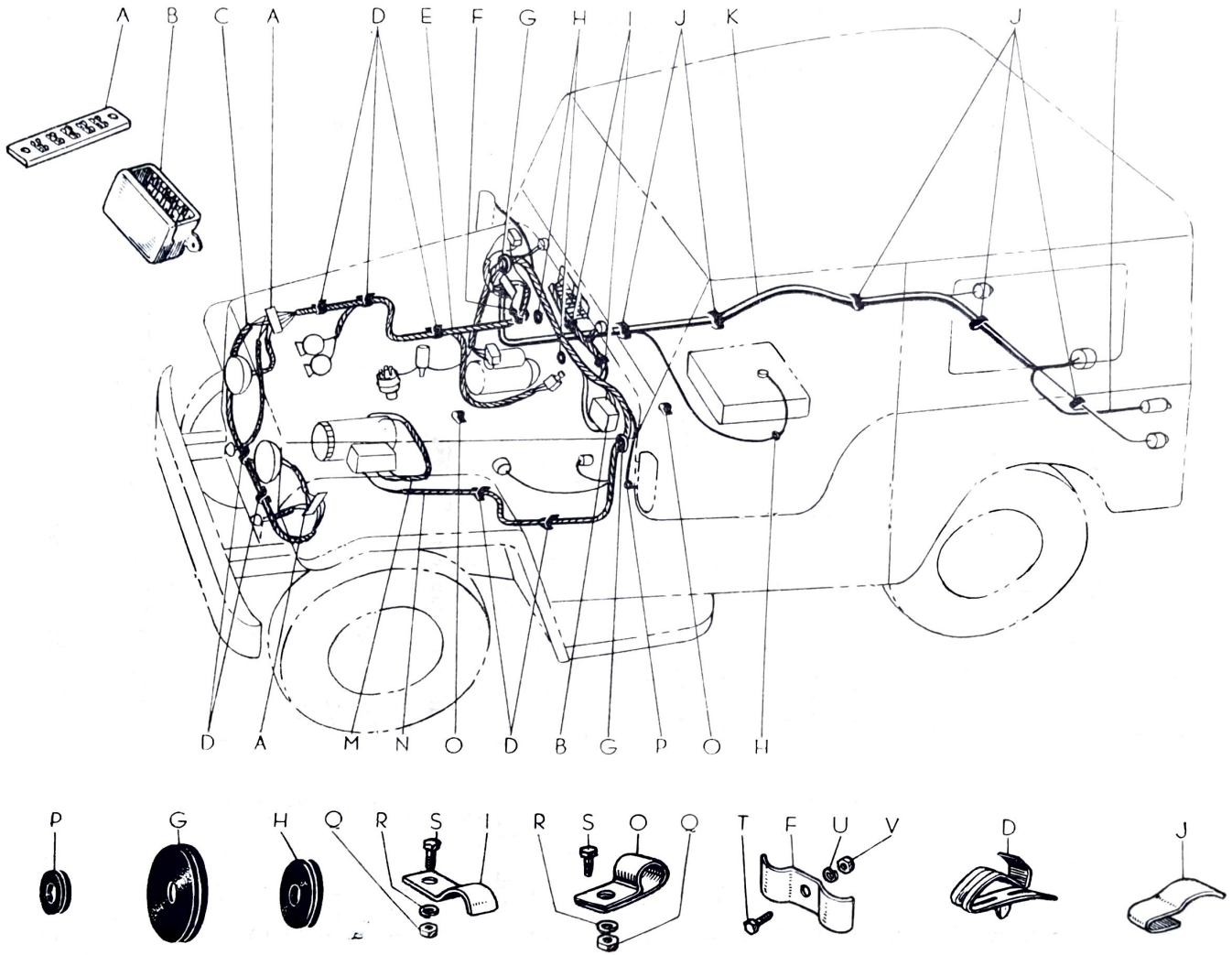

KEY	PART NO.	PART NAME	PER CAR	MODEL

WIRE HARNESS, FUSE BOX, CLAMP & LEAD GUM

(FIG. 59)

A	RS 56910	5 Post junction block assembly	3	BJ25. BJ25L
B	2BJ 56500	Fuse box assembly	1	BJ25. BJ25L
C	BJ25 56130	Front end wire harness assembly	1	BJ25
	BJ25L56130	Front end wire harness assembly	1	BJ25L
D	RS 56112	Clamp, wire harness	7	BJ25. BJ25L
E	BJ25 56110	Cab wire harness assembly	1	BJ25
	BJ25L56110	Cab wire harness assembly	1	BJ25L
F	BXL 56413	Clamp, wire harness double	1	BJ25. BJ25L
	SG 56415	Clamp, speedometer flexible tube	1	BJ25. BJ25L
G	BX 53418	Set gum, wire	2	BJ25. BJ25L
H	BX 53422	Hole gum, accel pedal	3	BJ25. BJ25L
I	BX 56411	Clamp, cord large	2	BJ25. BJ25L
J	BM 54428	Clamp, cord	5	BJ25. BJ25L
K	BJ27 56160	Chassis wire harness assembly	1	BJ25
	BJ25L56160	Chassis wire harness assembly	1	BJ25L
L	BJ25 56104	Trailer socket sub wire complete	1	BJ25. BJ25L
M	BJ25 56140	Generator side wire harness assembly	1	BJ25
	BJ25L56140	Generator side wire harness assembly	1	BJ25L
N	BJ25 56120	Front side wire harness assembly	1	BJ25
	BJ25L56120	Front side wire harness assembly	1	BJ25L
O	5307	Clamp, battery cord	2	BJ25. BJ25L
P	BJ 56151	Lead gum, cab wire harness	2	BJ25. BJ25L
Q	TNN 0806	Nut	4	
R	SWH 08	Washer, spring	4	
S	TBN 0815	Bolt	4	
T	JBN 0615	Bolt	1	
U	SWH 06	Washer, spring	1	
V	JNT 0605	Nut	1	

HEAD LIGHT & FLUSHER LAMP

(FIG. 60)

	2BJ 55100	Head light assembly (includes KEY—A~S of Fig.—60)	2	BJ25. BJ25L
A	RS 55111	Rim, head light	2	BJ25. BJ25L
B	RS 55112	Ring, head light gum	2	BJ25. BJ25L
C	MBT 0406	Bolt	6	
D	SWH 04	Washer, spring	10	
E	RS 55113	Ring, head light retaining	2	BJ25. BJ25L
F	RS 55103	Head light shield beam unit complete	2	BJ25. BJ25L
G	FA 55101	Head lamp bulb complete	2	BJ25. BJ25L

FIG.—60 HEAD LIGHT & FLASHER LAMP

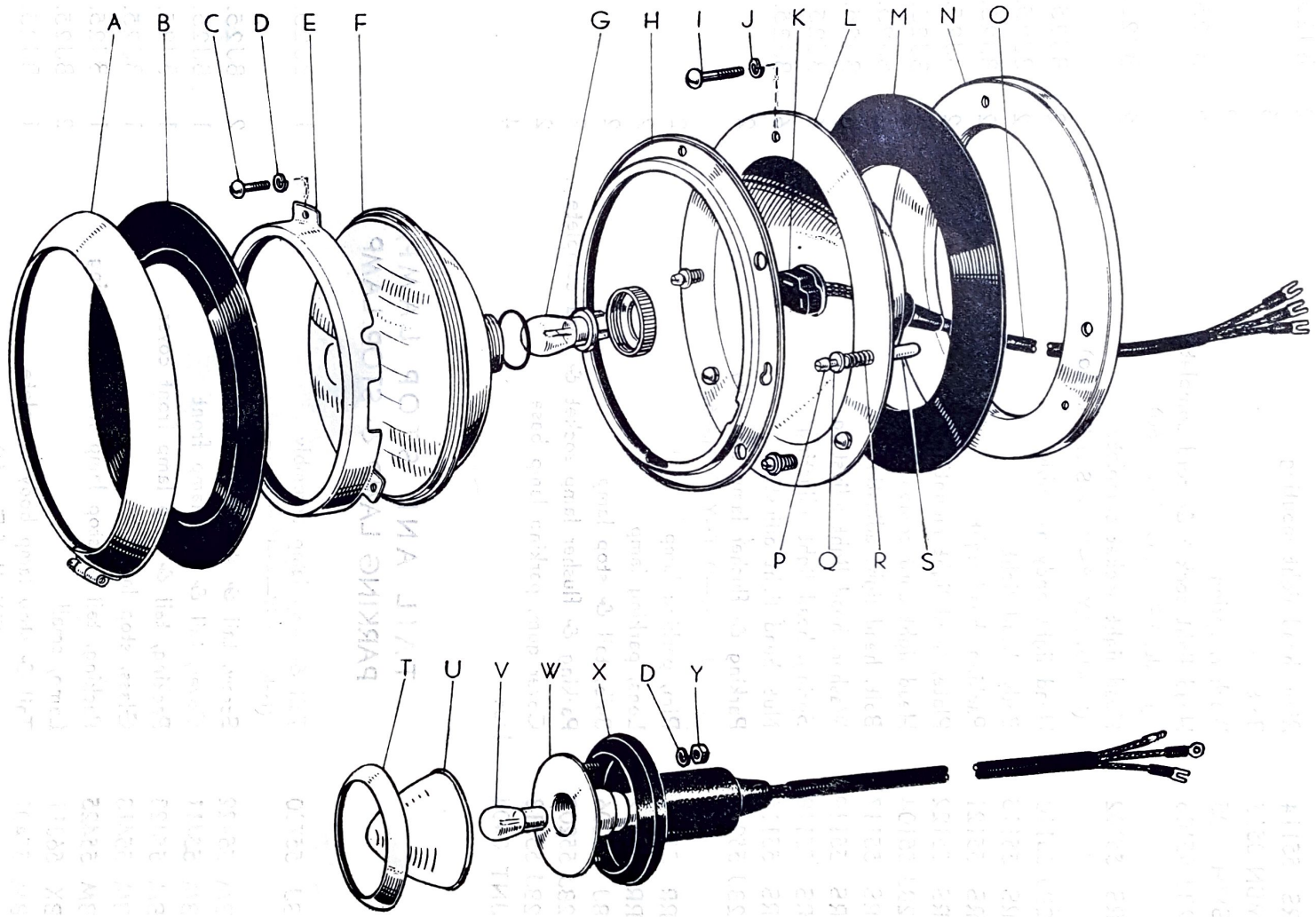

KEY	PART NO.	PART NAME	PER CAR	MODEL
(FIG. 60)				
H	RS 55114	Ring, head light mouting	2	BJ25. BJ25L
I	MBN 0515	Bolt	6	
J	SWH 05	Washer, spring	6	
	2BJ 55106	Head light socket & cord complete (includes KEY—K, O of Fig.—60)	2	BJ25. BJ25L
K	RS 55102	Head light socket complete (includes KEY—B~M, D~S of Fig.—60)	2	BJ25. BJ25L
	2BJ 55110	Head light body assembly	2	BJ25. BJ25L
L	RS 55115	Body, head light	2	BJ25. BJ25L
M	RS 55121	Packing, head light	2	BJ25. BJ25L
N	RS 55122	Plate, head light mounting	2	BJ25. BJ25L
O	2BJ 55104	Head light cord complete	2	BJ25. BJ25L
P	RS 55117	Bolt, head light adjusting	6	BJ25. BJ25L
Q	RS 55119	Washer, head light adjusting	6	BJ25. BJ25L
R	RS 55118	Spring, head light adjusting	6	BJ25. BJ25L
S	RS 55116	Nut, head light adjusting	6	BJ25. BJ25L
	2BJ 55200	Parking & flusher lamp assembly (includes KEY—D, T~Y of Fig.—60)	2	BJ25L
T	RR 55411	Rim, parking lamp	2	BJ25L
U	RR 55412	Lens, parking lamp	2	BJ25L
V	BJ 55206	Bulb, tail & stop lamp	2	BJ25L
W	2BJ 55202	Parking & flusher lamp socket & cord complete	2	BJ25L
X	2BJ 55313	Cover gum, parking lamp base	2	BJ25L
Y	JNT 0404	Nut	4	

TAIL AND STOP LAMP, PARKING LAMP & STOP LAMP

(FIG. 61)				
	BJ 55700	Tail & stop lamp assembly (includes KEY—A~M of Fig.—61)	1	BJ25. BJ55L
A	BM 55422	Screw, tail & stop lamp front cover	2	BJ25. BJ25L
B	BM 55411	Cover, tail & stop lamp front	1	BJ25. BJ25L
C	BM 55423	Packing, tail & stop lamp front cover	1	BJ25. BJ25L
D	BM 55413	Glass, stop lamp	1	BJ25. BJ25L
E	BM 55425	Packing, tail & stop lamp front cover ring	1	BJ25. BJ25L
F	BX 56311	Lamp, small	2	BJ25. BJ25L
G	BM 55401	Tail & stop lamp body complete (includes KEY—H of Fig.—61)	1	BJ25. BJ25L
H	BJ 55701	Tail & stop lamp cord complete	2	BJ25. BJ25L
I	SWH 05	Washer, spring	2	
J	BM 55226	Bolt, tail & stop lamp body fix	2	BJ25. BJ25L
K	BM 55412	Glass, tail lamp	1	BJ25. BJ25L
L	BM 55414	Glass, number lamp	1	BJ25. BJ25L

FIG.—61 TAIL & STOP LAMP, PARKING LAMP

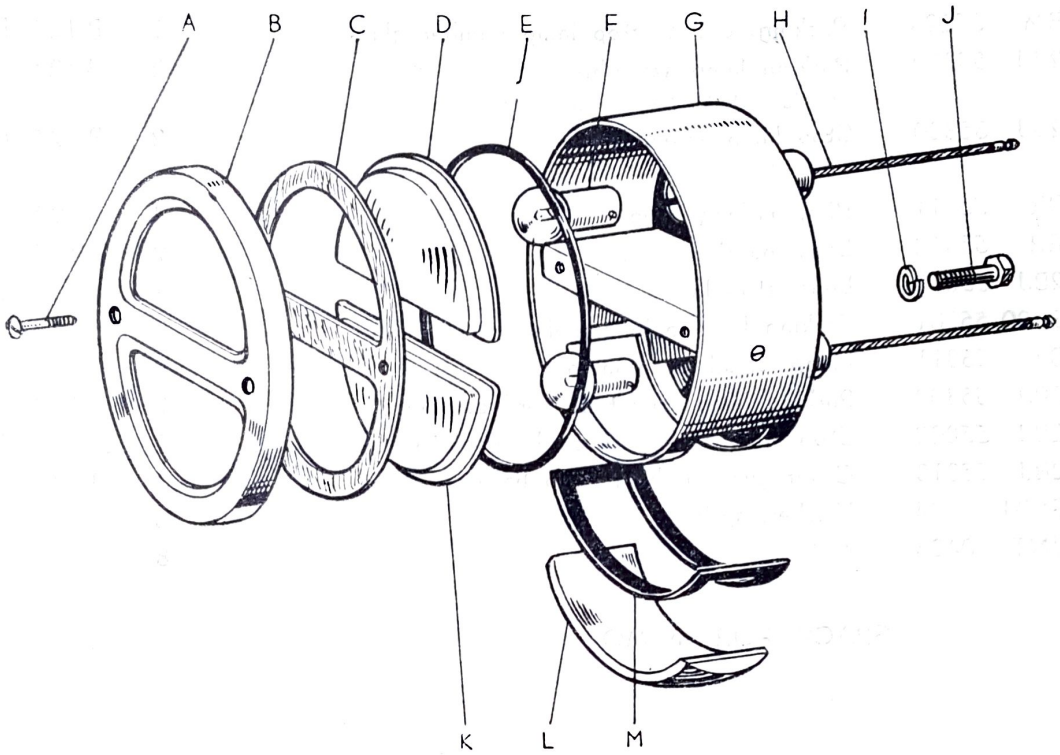

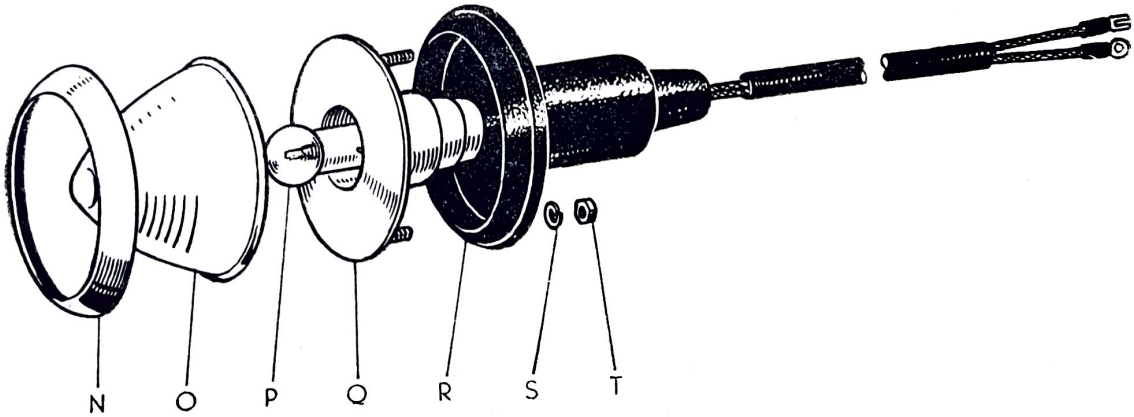

KEY	PART NO.	PART NAME	PER CAR	MODEL
(FIG. 61)				
M	BM 55224	Packing, tail & stop lamp number glass	1	BJ25. BJ25L
	2BJ 55300	Parking lamp assembly (includes KEY—N~T of Fig.—61)	2	BJ25
	2BJ 55800	Stop lamp assembly (includes KEY—N~T of Fig.—61)	2	BJ25. BJ25L
N	RR 55411	Rim, parking lamp	4	BJ25. BJ25L
O	RR 55412	Lens, parking lamp	2	BJ25
	2BJ 55812	Lens, stop lamp	2	BJ25L
P	BJ20 55301	Parking lamp bulb complete	2	BJ25
	BX 56311	Lamp, small (stop lamp)	2	BJ25L
Q	2BJ 55302	Parking lamp socket & cord complete	2	BJ25
	2BJ 55802	Stop lamp socket & cord complete	2	BJ25L
R	2BJ 55313	Cover gum, parking lamp base	4	BJ25. BJ25L
S	SWH 04	Washer, spring	8	
T	JNT 0404	Nut	8	

SPACE FOR MEMO

KEY	PART NO.	PART NAME	PER CAR	MODEL

TRAILER SOCKET, INSPECTION LAMP

(FIG. 62)

A	BJT 58600	Trailer socket assembly	1	BJ25. BJ25L
B	BJT 58537	Wire, trailer socket earth	1	BJ25. BJ25L
C	BX 54800	Stop switch assembly	1	BJ25. BJ25L
D	BX 54900	Dimmer switch assembly	1	BJ25. BJ25L
E	FQS 55701	Inspection lamp bulb complete	1	BJ25. BJ25L
F	BH26 55700	Inspection lamp assembly (includes KEY—E, G of Fig. —62)	1	BJ25. BJ25L
G	RK 55703	Inspection lamp consent complete	1	BJ25. BJ25L
H	MBN 0410	Bolt	2	
I	IW 0804	Washer	2	
J	JNT 0404	Nut	2	

FIG.—62 TRAILER SOCKET, INSPECTION LAMP

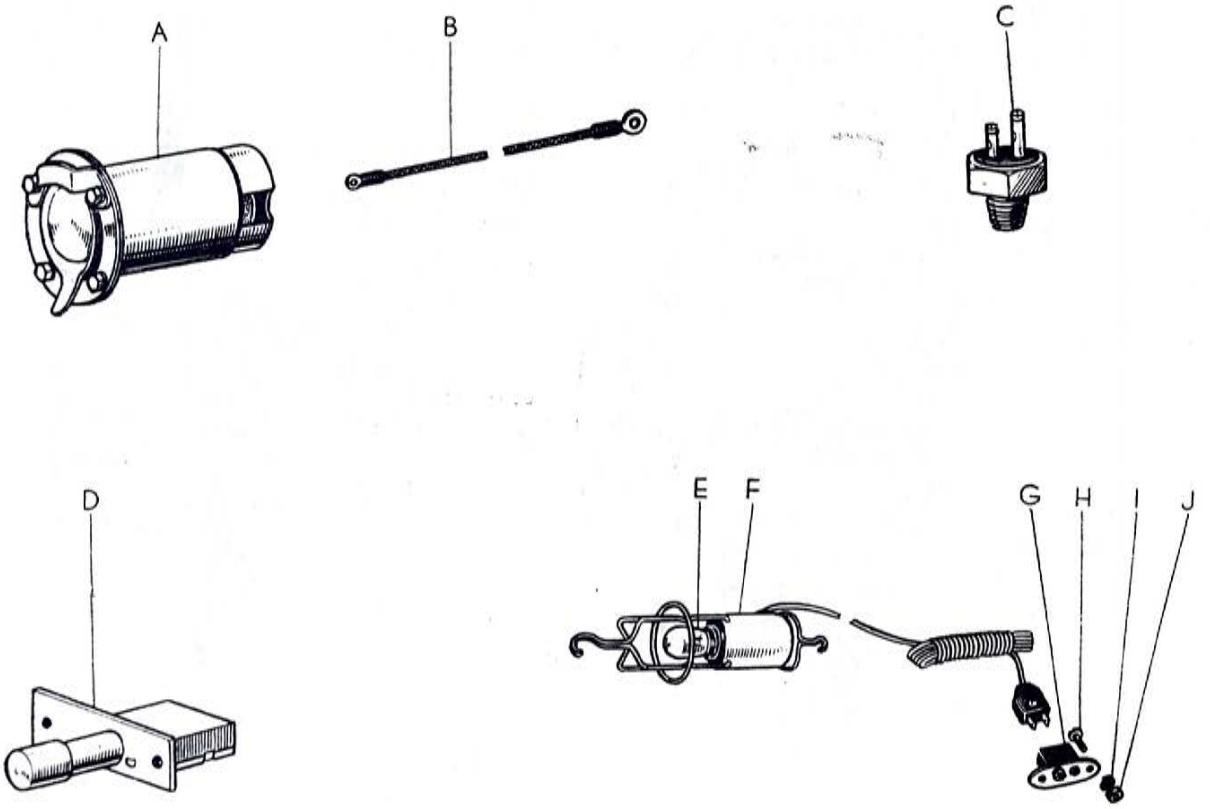

FIG.—63 HORN & HORN RELAY

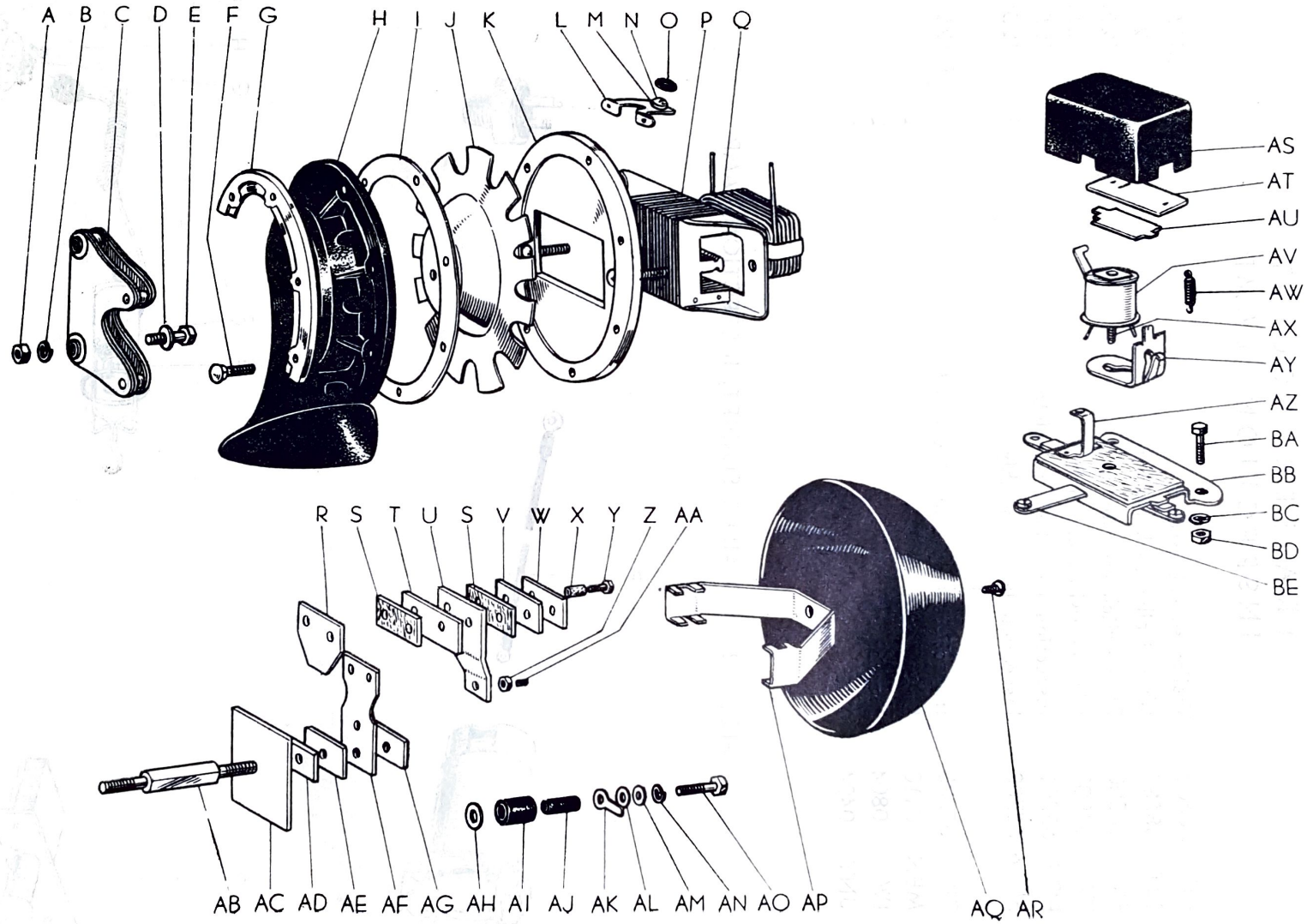

KEY	PART NO.	PART NAME	PER CAR	MODEL

HORN & HORN RELAY

(FIG. 63)

	BY 58600	Hard horn assembly (includes KEY—A~AR of Fig.—63)	1	BJ25. BJ25L
	BY 58700	Soft horn assembly (includes KEY—A~AR of Fig.—63)	1	BJ25. BJ25L
A	TNN 0806Z	Nut	4	
B	SWH 08	Washer, spring	4	
C	BY 58650A	Horn support spring complete	2	BJ25. BJ25L
D	PWL 2508	Washer, plate	4	
E	TBN 0830Z	Bolt	4	
F	BY 58697	Biss	8	BJ25. BJ25L
G	BY 58695	Plate, trumpet holder	2	BJ25. BJ25L
H	BY 58690	Trumpet complete (hard horn)	1	BJ25. BJ25L
	BY 58790	Trumpet complete (soft horn)	1	BJ25. BJ25L
I	BY 58694	Packing	2	BJ25. BJ25L
J	BY 58630	Diaphragm (hard horn)	1	BJ25. BJ25L
	BY 58730	Diaphragm (soft horn)	1	BJ25. BJ25L
K	BY 58610	Base complete	2	BJ25. BJ25L
L	54770	Terminal complete	2	BJ25. BJ25L
M	WS 4	Washer, spring	2	
N	54769	Biss, terminal	2	BJ25. BJ25L
O	54739	Insulation gum	2	BJ25. BJ25L
P	BY 58620A	Core complete	2	BJ25. BJ25L
Q	BY 58625A	Coil	2	BJ25. BJ25L
R	BY 58640	Contact point spring complete	2	BJ25. BJ25L
S	54722B	Insulator	4	BJ25. BJ25L
T	54727B	Plate, terminal	2	BJ25. BJ25L
U	BY 58648	Supporter, point	2	BJ25. BJ25L
V	BY 58649	Washer, point supporter	2	BJ25. BJ25L
W	54721	Washer, lock	2	BJ25. BJ25L
X	BY 58651	Bush, insulation	4	BJ25. BJ25L
Y	54720	Bolt	4	BJ25. BJ25L
Z	nH 0604	Nut	12	
AA	A 27740	Point, upper contact	2	BJ25. BJ25L
AB	BY 58632	Bolt, moving	2	BJ25. BJ25L
AC	BY 58635	Plate, moving	2	BJ25. BJ25L
AD	BY 58633	Plate, washer	2	BJ25. BJ25L
AE	54713B	Holder, washer	2	BJ25. BJ25L
AF	BY 58645	Spring, contact braker	2	BJ25. BJ25L
AG	BY 58636	Nut, lock	2	BJ25. BJ25L
AH	BX 67121	Insulator	2	BJ25. BJ25L
AI	BY 58670	Piece, resistance	2	BJ25. BJ25L
AJ	BY 58672	Tube, resistance piece insulation	2	BJ25. BJ25L

KEY	PART NO.	PART NAME	PER CAR	MODEL
(FIG. 63)				
AK	BY 58671	Plate, resistance contact	2	BJ25. BJ25L
AL	WP20×5.2×0.8ZC	Washer	2	
AM	WP 5Z	Washer	2	
AN	WS 5	Washer, spring	2	
AO	SF 2525Z	Biss	2	
AP	BY 58681	Supporter, case	2	BJ25. BJ25L
AQ	BY 58680	Case	2	BJ25. BJ25L
AR	54755	Biss, case holder	2	BJ25. BJ25L
	BY 58800	Horn relay complete (includes KEY—AS~AZ, BB, BE of Fig.—63)	1	BJ25. BJ25L
AS	BY 58801	Cover, relay	1	BJ25. BJ25L
AT	BY 58832	Holder, upper point	1	BJ25. BJ25L
AU	BY 58831	Plate, armature	1	BJ25. BJ25L
AV	BY 58810	Coil complete	1	BJ25. BJ25L
AW	BY 58850	Spring, armature	1	BJ25. BJ25L
AX	BY 58813	Core, horn relay	1	BJ25. BJ25L
AY	BY 58837	Plate, stationary	1	BJ25. BJ25L
AZ	BY 58836	Holder, lower point	1	BJ25. BJ25L
BA	JBN 0615	Bolt	2	
BB	BY 58840	Relay base complete	1	BJ25. BJ25L
BC	SWH 06	Washer, spring	2	
BD	JNT 0605	Nut	2	
BE	BY 58843	Terminal, horn	1	BJ25. BJ25L

VENTILATOR

(FIG. 64)				
A	BJ25 62301	Front window ventilator cover plate complete	1	BJ25. BJ25L
B	BJ25 62304	Front window ventilator mould complete	1	BJ25. BJ25L
C	BJ25 62313	Packing gum, front window ventilator	1	BJ25. BJ25L
D	SWL 04	Washer, spring	10	
E	JNT 0404	Nut	10	
F	BJ25 62202	Front window frame front net complete	2	BJ25. BJ25L
G	BJ25 62325	Pin, front window ventilator arm (large)	1	BJ25. BJ25L
H	BJ25 62326	Pin, front window ventilator arm (small)	1	BJ25. BJ25L
I	BJ25 62221	Reinforce, front window ventilator R. H.	1	BJ25. BJ25L
J	BJ25 62324	Arm, front window ventilator	2	BJ25. BJ25L
K	JNT 0504	Nut	8	
L	SWL 05	Washer, spring	8	
M	PWL 1005	Washer, plate	8	
N	BJ25 62322	Nut, front window ventilator work	1	BJ25. BJ25L
O	BJ25 62321	Bolt, front window ventilator work	1	BJ25. BJ25L
P	MBN 0515Z	Bolt	8	
Q	BJ25 62302	Front window ventilator work bolt support complete	1	BJ25. BJ25L

FIG.—64 VENTILATOR

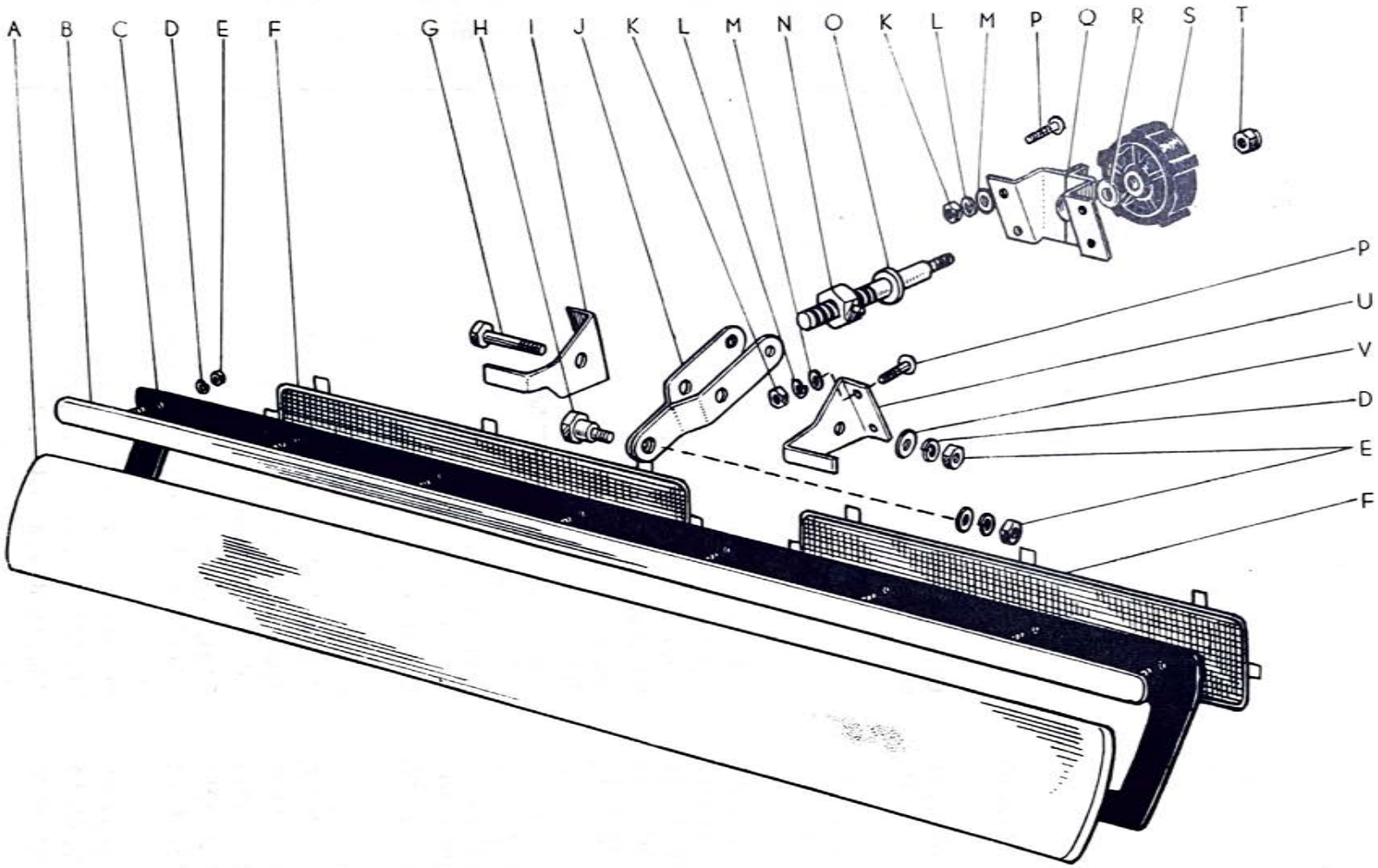

KEY	PART NO.	PART NAME	PER CAR	MODEL
(FIG. 64)				
R	PWL 2006	Washer, plate	1	
S	BJ25 62303	Front window ventilator handle complete	1	BJ25. BJ25L
T	BJ25 62323	Nut, front window ventilator handle	1	BJ25. BJ25L
U	BJ25 62222	Reinforce, front window ventilator L. H.	1	BJ25. BJ25L
V	PWL 0804	Washer, plate	2	

REAR BODY, CURTAIN, FRONT WINDOW & MIRROR

(FIG. 65)				
	BJ25 63510	Cover top assembly (includes KEY—A~C, H, AD~AF of Fig.—65)	1	BJ25. BJ25L
A	BJ25 63511	Canvas, cover top	1	BJ25. BJ25L
B	JNT 0303	Nut	38	
C	PWL 0403	Washer, plate	38	
D	BJ25 63114	Frame, side curtain inner	2	BJ25. BJ25L
	BJ25 63120	Side curtain assembly L. H. (includes KEY—B~G of Fig.—65)	1	BJ25. BJ25L
	BJ25 63110	Side curtain assembly R. H.	1	BJ25. BJ25L
E	BJ25 63112	Canvas, side curtain L. H.	1	BJ25. BJ25L
	BJ25 63111	Canvas, side curtain R. H.	1	BJ25. BJ25L
F	BJ25 63113	Window, side curtain	2	BJ25. BJ25L
G	BJ25 63115	Frame, side curtain outer	2	BJ25. BJ25L
H	MBN 0312Z	Bolt	38	
I	BJR 68350	Room back mirror assembly	1	BJ25. BJ25L
J	BJ25 63103	Side top bow complete R. H.	1	BJ25. BJ25L
K	BJ25 63101	Front top bow complete	1	BJ25. BJ25L
L	BJ25 63104	Side top bow complete L. H.	1	BJ25. BJ25L
	BJ 69200	Outside back mirror assembly (includes KEY—M, N of Fig.—65)	1	BJ25. BJ25L
M	BJ 69202	Outside back mirror complete	1	BJ25. BJ25L
N	BJ 69210	Outside back mirror stay assembly	1	BJ25. BJ25L
O	BJ25 62201	Front window frame complete	1	BJ25. BJ25L
P	BJ25 62212	Shield gum, front window	1	BJ25. BJ25L
Q	BJ25 62211	Glass, front windshield	1	BJ25. BJ25L
	BJ25 59400	Windshield wiper arm & blade assembly (includes KEY—R, S of Fig.—65)	2	BJ25. BJ25L
R	BJ25 59401	Windshield wiper blade complete	2	BJ25. BJ25L
S	BJ25 59402	Windshield wiper arm complete	2	BJ25. BJ25L
	BJ25 59300	Windshield wiper link motion assembly (includes KEY—T~V of Fig.—65)	1	BJ25. BJ25L
T	BJ25 59302	Windshield wiper link motion shaft complete L. H.	1	BJ25. BJ25L
	BJ25 59301	Windshield wiper link motion shaft complete R. H.	1	BJ25. BJ25L
U	BJ25 59331	Rod, windshield wiper link motion connecting	1	BJ25. BJ25L

FIG.—65 REAR BODY & CURTAIN

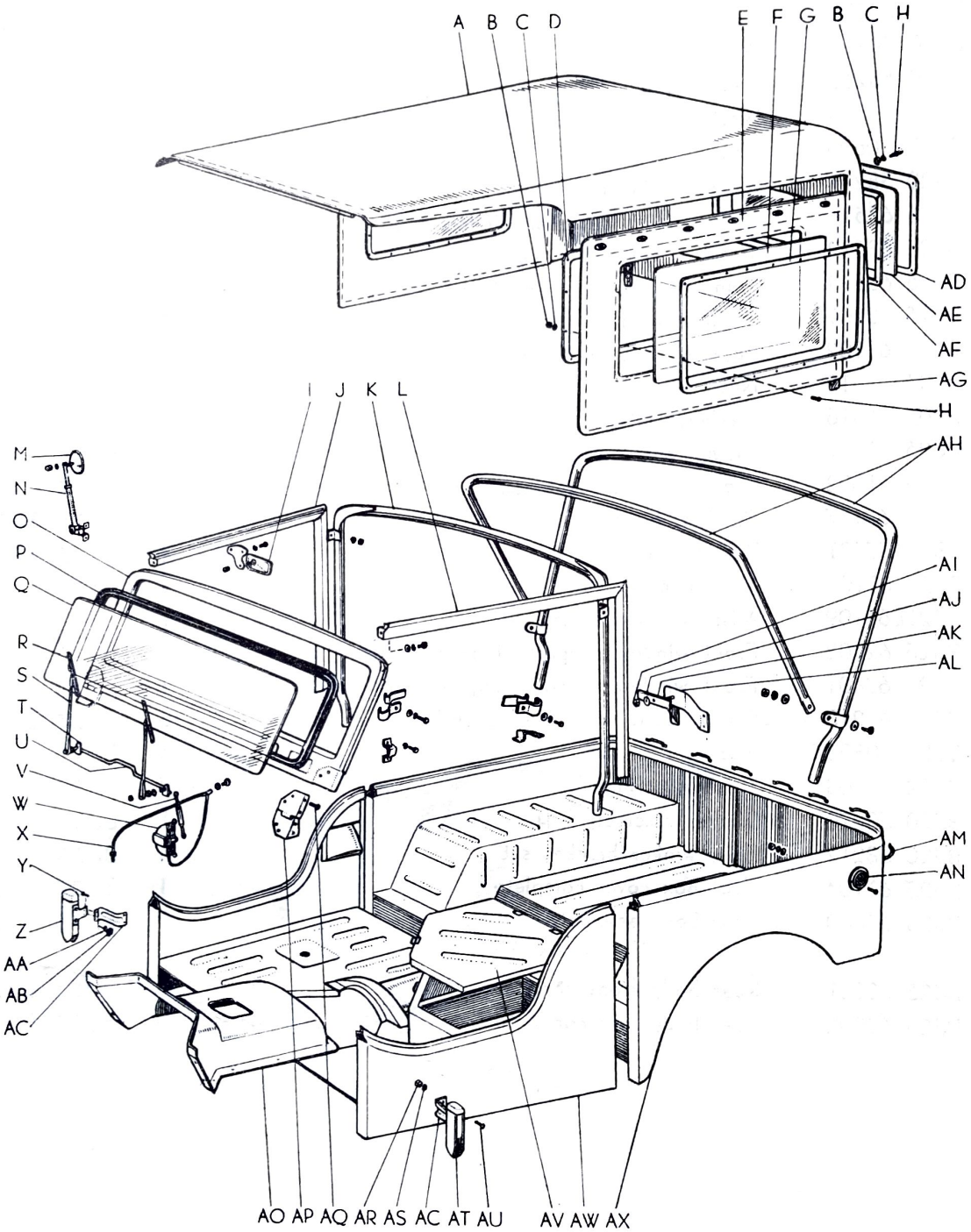

KEY	PART NO.	PART NAME	PER CAR	MODEL
(FIG. 65)				
V	BJ25 59303	Windshield wiper link motion rod complete	1	BJ25. BJ25L
W	BJ25 59100	Windshield wiper motor assembly	1	BJ25. BJ25L
X	BJ25 59217	Hose, windshield wiper gum	1	BJ25. BJ25L
Y	BJ20 58213	Bolt, winker set	4	BJ25
Z	BJ20 58210	Winker assembly R. H.	1	BJ25
AA	SWH 06	Washer, spring	4	BJ25only
AB	JNT 0605	Nut	4	BJ25only
AC	BJ20 58211	Bracket, winker	2	BJ25
AD	BJ25 63514	Frame, cover top rear window outer	1	BJ25. BJ25L
AE	BJ25 63512	Window, cover top rear	1	BJ25. BJ25L
AF	BJ25 63513	Frame, cover top rear window inner	1	BJ25. BJ25L
AG	BJ25 63109	Buckle complete	8	BJ25. BJ25L
AH	BJ25 63102	Rear top bow complete	1	BJ25. BJ25L
AI	TNN 1613	Nut	1	
AJ	PWL 5016	Washer, plate	1	
AK	BJ25 61422	Clamp, spare wheel	1	BJ25. BJ25L
AL	BJ25 61402	Spare wheel bracket complete	1	BJ25. BJ25L
AM	BJ 63117	Bracket, band	8	BJ25. BJ25L
AN	3BMV75601	Reflector let complete	4	BJ25. BJ25L
AO	BJ25 61109	Mission cover complete	1	BJ25
	BJ25L61109	Mission cover complete	1	BJ25L
AP	BJ25 62402	Front window support hinge complete L. H.	1	BJ25. BJ25L
	BJ25 62401	Front window support hinge complete R. H.	1	BJ25. BJ25L
AQ	RS 61213	Screw, front window support hinge set	16	BJ25. BJ25L
AR	TNN 0806Z	Nut	4	BJ25only
AS	SWH 08	Washer, spring	4	BJ25only
AT	BJ20 58220	Winker assembly L. H.	1	BJ25
AU	BJ20 58212	Bolt, winker bracket set	4	BJ25
AV	BJ25 61104	Tool box cover complete	1	BJ25. BJ25L
	BJ25 60000	Rear body assembly (includes KEY—AW, AX of Fig.—65)	1	BJ25. BJ25L
AW	BJ25 60001	Rear body front complete	1	BJ25. BJ25L
AX	BJ25 60002	Rear body rear complete	1	BJ25. BJ25L

FIG.—66 S E A T

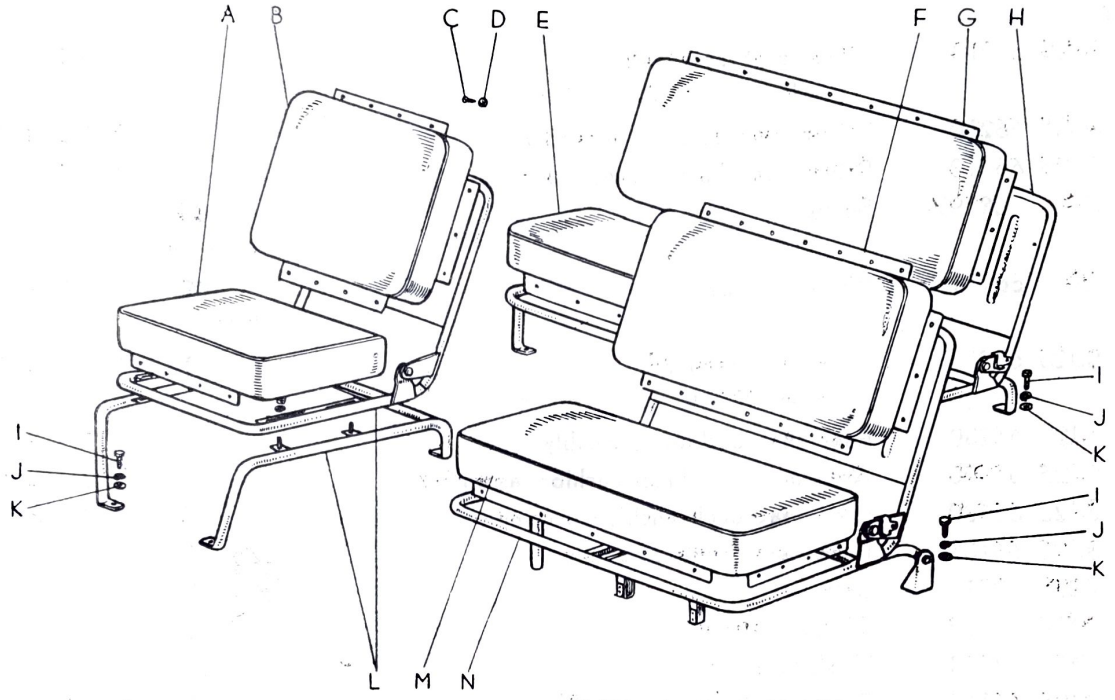

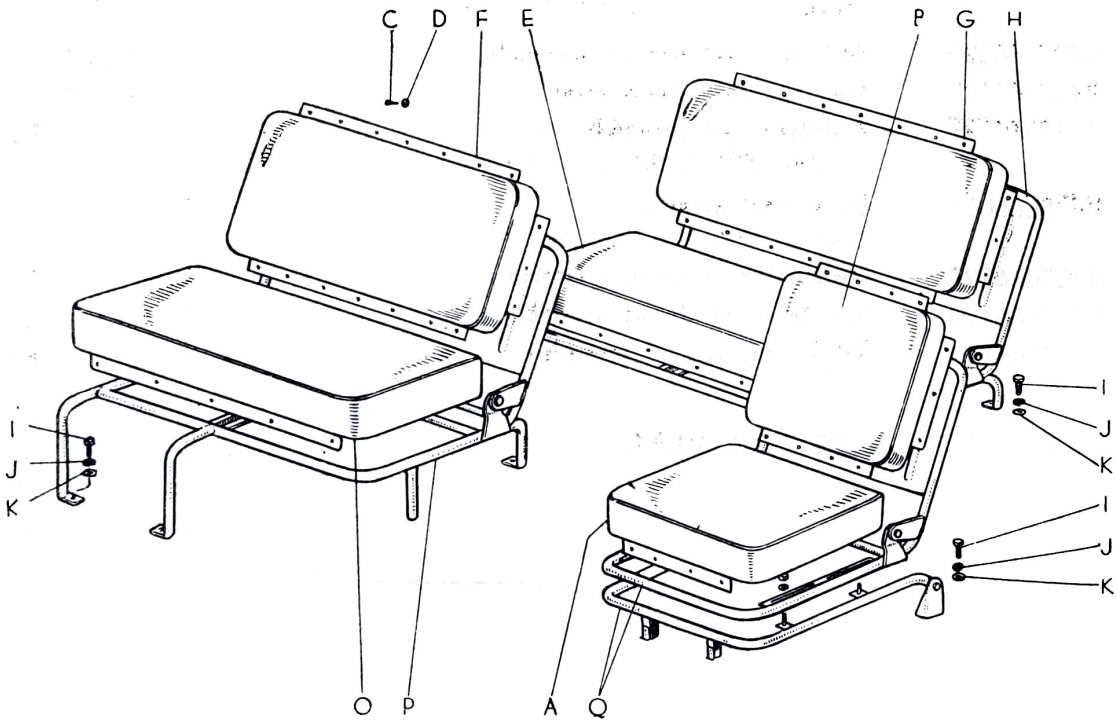

KEY	PART NO.	PART NAME	PER CAR	MODEL
		S E A T		
(FIG. 66)				
	BJ25 66010	Driver seat assembly (includes KEY—A~D, L of Fig.—66)	1	BJ25
A	BJ25 66210	Driver seat cushion assembly	1	BJ25. BJ25L
B	BJ25 66510	Driver seat back cushion assembly	1	BJ25. BJ25L
C	CS 0819Z	Screw	102 (BJ25L=101)	
D	RS 66911	Washer, finish	102 (BJ25L=101)	BJ25. BJ25L
	BJ25 66030	Rear seat assembly (includes KEY—C~E, G, H of Fig.—66)	1	BJ25. BJ25L
E	BJ25 66230	Raer seat cushion assembly	1	BJ25. BJ25L
F	BJ25 66520	Assistant seat back cushion assembly	1	BJ25. BJ25L
G	BJ25 66530	Rear seat back cushion assembly	1	BJ25. BJ25L
H	BJ25 66130	Rear seat frame assembly	1	BJ25. BJ25L
I	TBN 0815Z	Bolt	13	
J	SWH 08	Washer, spring	13	
K	PWL 2508	Washer, plate	13	
L	BJ25 66110	Driver seat frame assembly	1	BJ25
	BJ25 66020	Assistant seat assembly (includes KEY—C, D, F, M, N of Fig.—66)	1	BJ25
M	BJ25 66220	Assistant seat cushion assembly	1	BJ25
N	BJ25 66120	Assistant seat frame assembly	1	BJ25
	BJ25L66020	Assistant seat assembly (includes KEY—C, D, F, O, P of Fig.—66)	1	BJ25L
	BJ25L66010	Driver seat assembly (includes KEY—A~D, Q of Fig.—66)	1	BJ25L
O	BJ25L66220	Assistant seat cushion assembly	1	BJ25L
P	BJ25L66120	Assistant seat frame assembly	1	BJ25L
Q	BJ25L66110	Driver seat frame assembly	1	BJ25L

SPACE FOR MEMO

TOOL GROUP

KEY	PART NO.	PART NAME	PER CAR	MODEL

STANDARD TOOL

(FIG. 67)

A	BX 91900	Case, tool	1	BJ25. BJ25L
B	RK 91100	Jack with handle 2 ton	1	BJ25. BJ25L
C	BM 7501	Handle, starting	1	BJ25. BJ25L
D	BX 91310	Plier, combination 8″	1	BJ25. BJ25L
E	BX 91330	Driver, screw (−) type 6″	1	BJ25. BJ25L
F	BX 91340	Driver, screw (−) type 3″	1	BJ25. BJ25L
G	BXL 91350	Driver, screw (+) type 4″	1	BJ25. BJ25L

FIG.—67 STANDARD TOOL

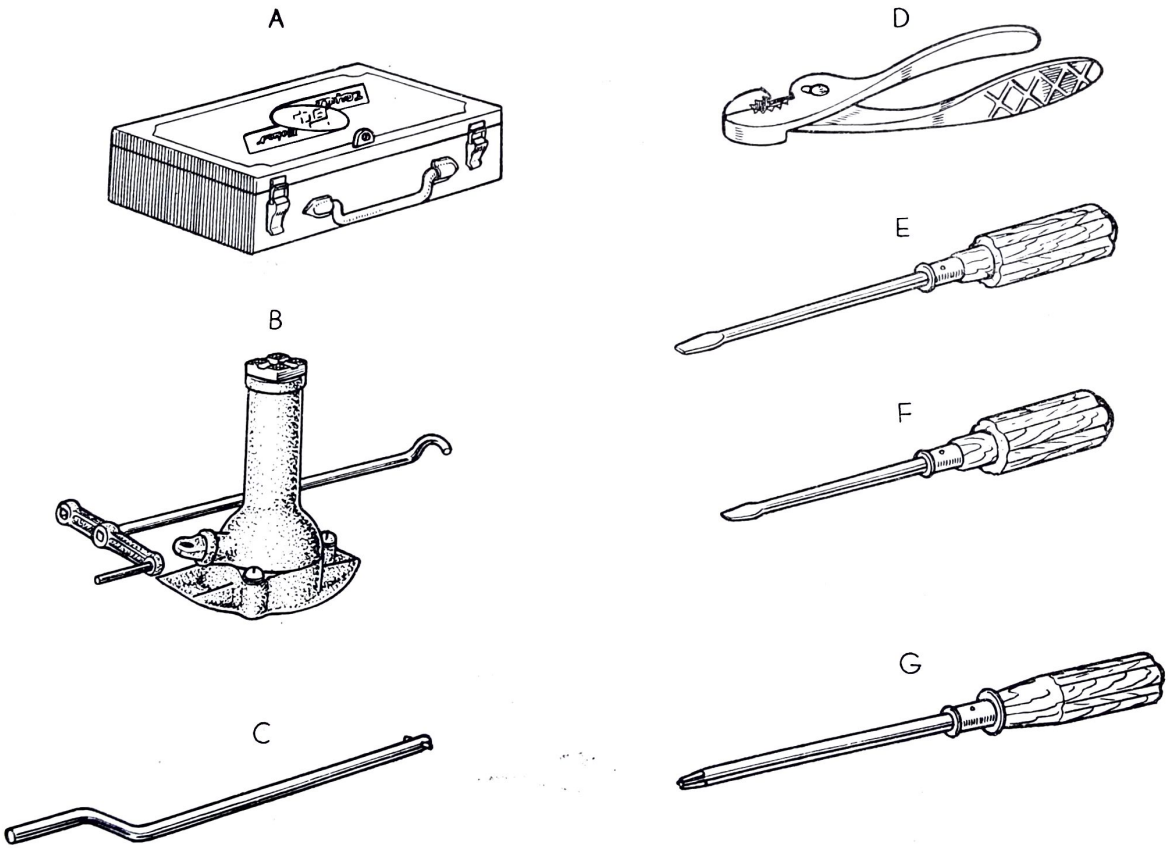

KEY	PART NO.	PART NAME	PER CAR	MODEL
(FIG. 68)				
H	BX 91370	Hammer, 1 pound	1	BJ25. BJ25L
I	BX 91410	Spanner, 6 pcs set	1	BJ25. BJ25L
J	BX 91450	Wrench, monkey 10″	1	BJ25. BJ25L
K	SG 91510	Wrench, spark plug 16 mm	1	BJ25. BJ25L
L	SG 91550	Wrench, hub nut box 23 mm	1	BJ25. BJ25L
M	BX 91600	Engine adjust kit	1	BJ25. BJ25L
	RK 91700	Pump, grease (includes KEY—N, O of Fig.—68)	1	BJ25. BJ25L
N	RK 91710	Pump, grease 150 cc type	1	BJ25. BJ25L
O	RK 91750	Hose, grease pump check	1	BJ25. BJ25L

FIG.—68 STANDARD TOOL

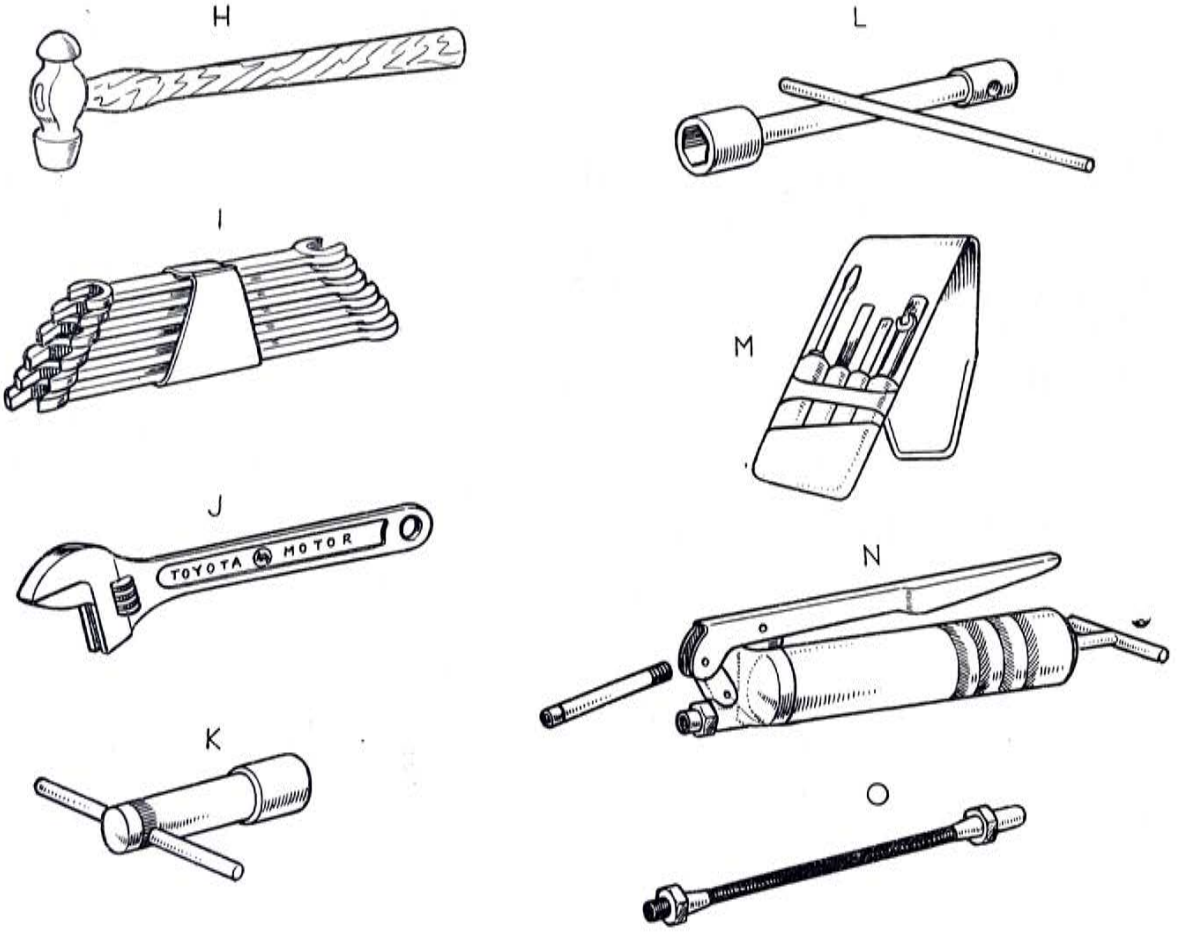

KEY	PART NO.	PRAT NAME	PER CAR	MODEL

SPECIAL SERVICE TOOL

(FIG. 69)				
A	BX S.S.T.-1001	Engine adjust kit		BJ25. BJ25L
B	BX S.S.T.-1003	Tool, valve guide		BJ25. BJ25L
C	BX S.S.T.-1022	Puller, crankshaft pulley & gear		BJ25. BJ25L
D	BX S.S.T.-1023	Replacer, crankshaft pulley & diff. drive pinion		BJ25. BJ25L
E	BX S.S.T.-1025	Puller, camshaft bearing		BJ25. BJ25L
F	BX S.S.T.-1042	Gauge, oil pan		BJ25. BJ25L
G	BX S.S.T.-1043	Gauge, oil pan nozzle		BJ25. BJ25L
H	BX S.S.T.-1051	Puller, water pump pulley seat		BJ25. BJ25L
(FIG. 70)				
I	FA S.S.T.-1052	Tool, water pump bushing		BJ25. BJ25L
J	BX S.S.T.-1053	Remover, water pump bushing		BJ25. BJ25L
K	BX S.S.T.-1061	Carburetor driver set		BJ25. BJ25L
L	FA S.S.T.-1075	Puller, clutch pilot bearing		BJ25. BJ25L
M	BX S.S.T.-1081	Puller, main drive gear & diff. drive pinion		BJ25. BJ25L
N	BX S.S.T.-1083	Remover, transmission gear shift lever		BJ25. BJ25L
O	BX S.S.T.-1084	Puller, counter gear		BJ25. BJ25L
P	RS S.S.T.-2003	Expounder, snap ring		BJ25. BJ25L
(FIG. 71)				
Q	SG S.S.T.-2033	Wrench, diff. adjust nut		BJ25. BJ25L
R	BX S.S.T.-2034	Puller, universal		BJ25. BJ25L
S	SG S.S.T.-2044	Puller, rear wheel bearing		BJ25. BJ25L
T	SG S.S.T.-2045	Replacer, rear wheel bearing		BJ25. BJ25L
U	BX S.S.T.-2071	Wrench, brake adjust (A)		BJ25. BJ25L
V	BX S.S.T.-2072	Wrench, brake adjust (B)		BJ25. BJ25L
W	FA S.S.T.-2081	Puller, steering wheel		BJ25. BJ25L
X	BX S.S.T.-2082	Puller, pitman arm		BJ25. BJ25L

SPACE FOR MEMO

FIG.—69 SPECIAL SERVICE TOOL

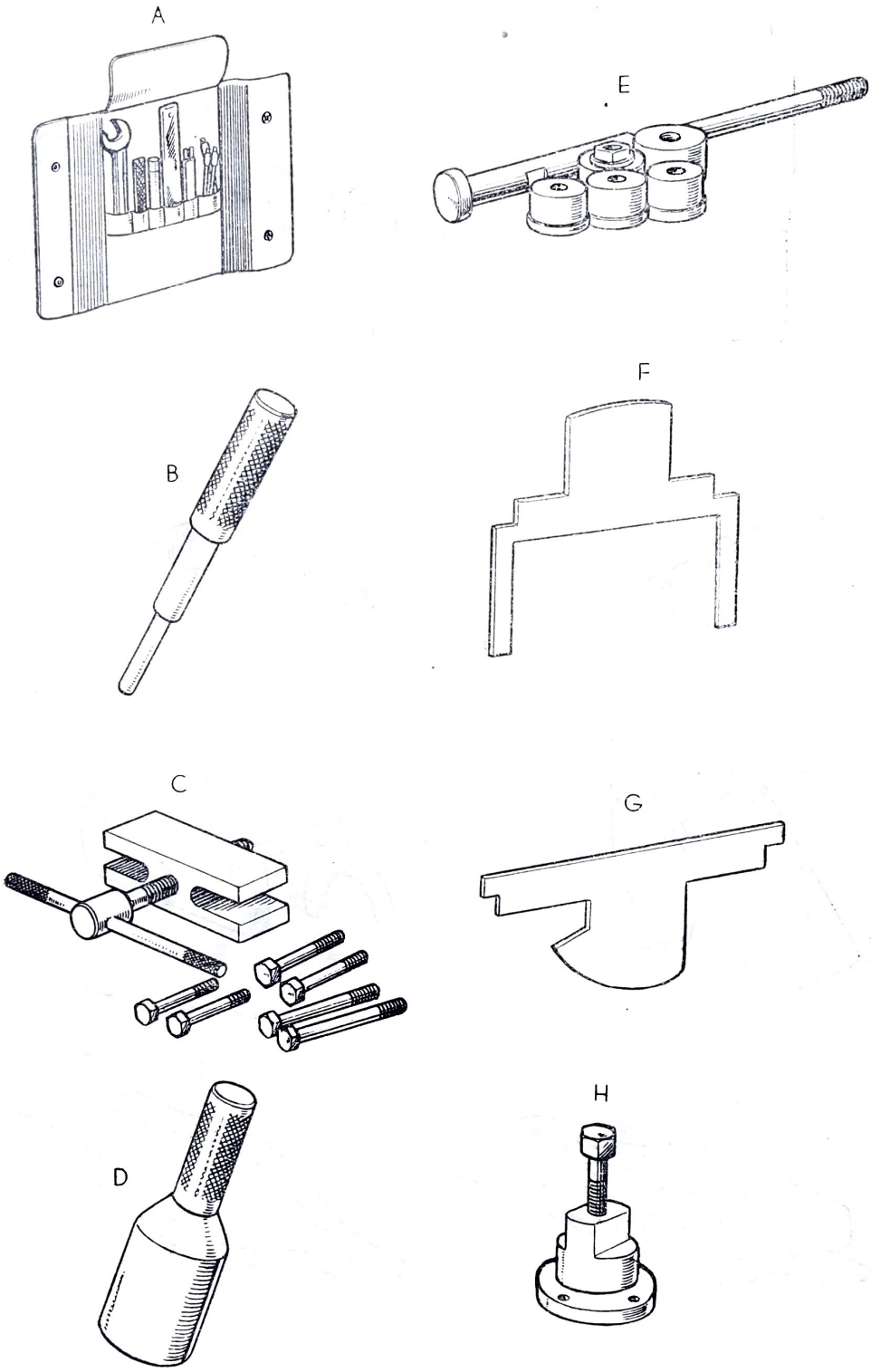

FIG.—70 SPECIAL SERVICE TOOL

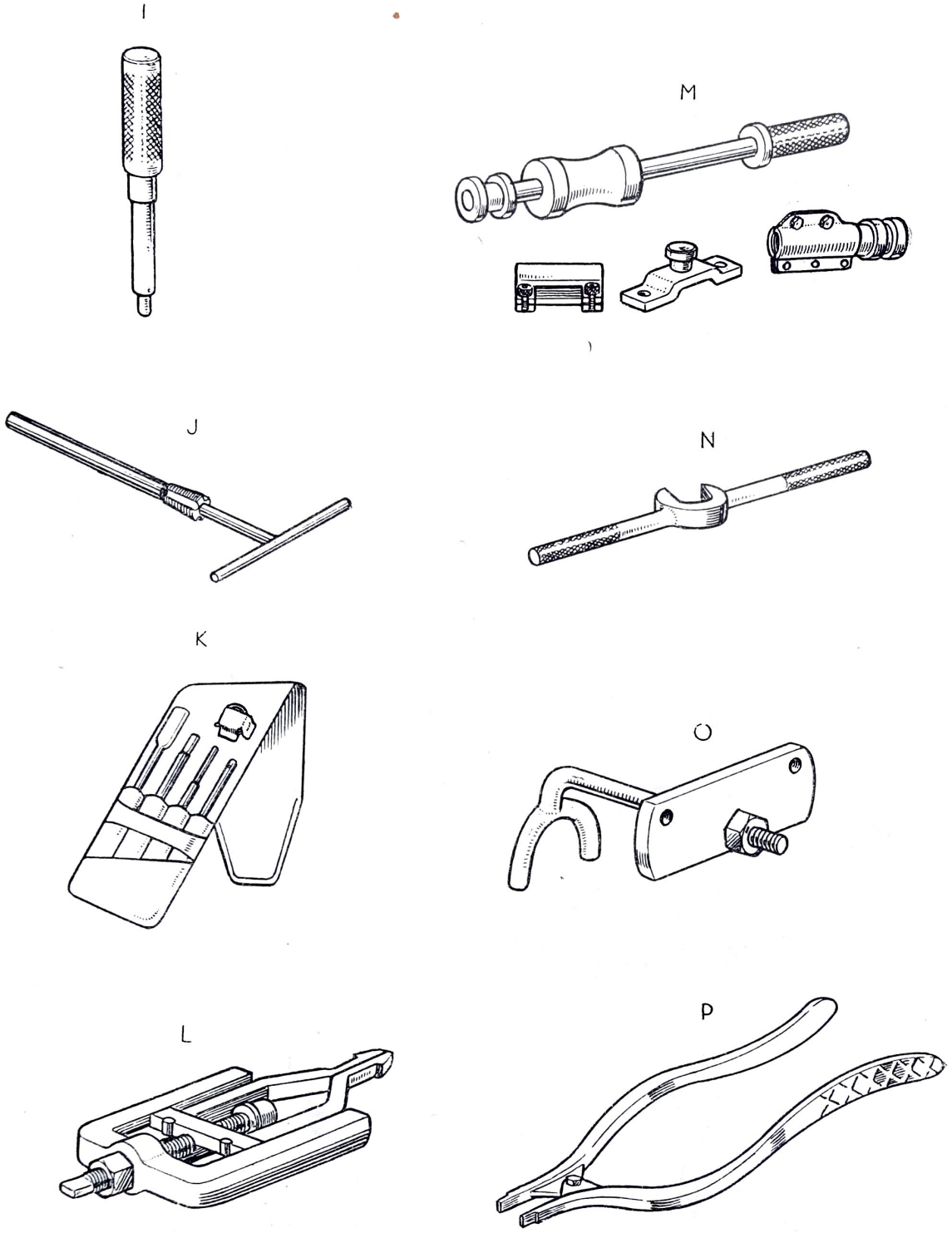

FIG.—71 SPECIAL SERVICE TOOL

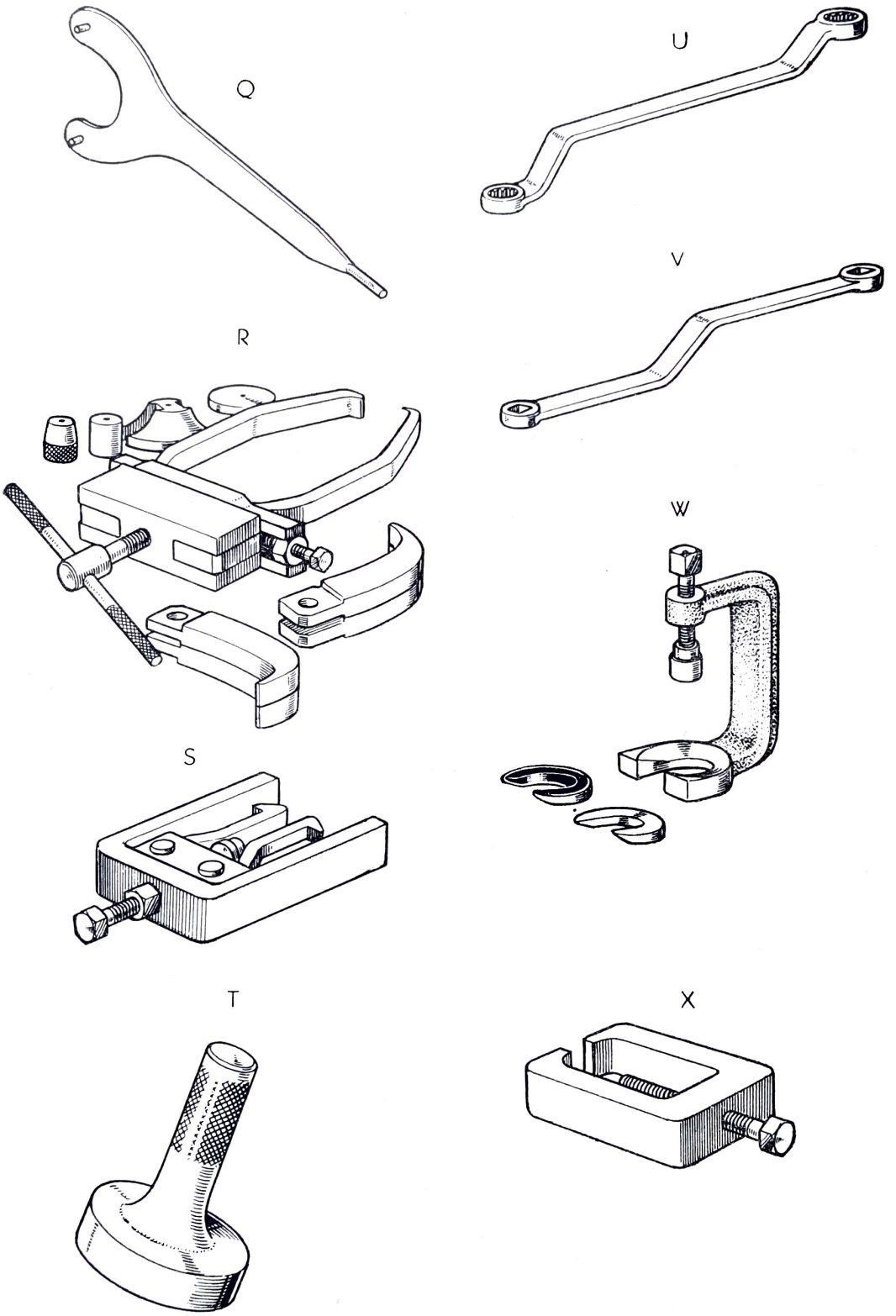

SPACE FOR MEMO

INDEX

1. Use this index in case the PARTS No. of any required part is known.

2. The order of PARTS Numbers listed herein has nothing to do with marks such as B, BX, BJ attached in front and -5, -10 in rear.

   Note : Marks attached in front show Models (Years) of vehicle, and marks attached in rear show over size etc.

3. Toyota Universal Parts including bolts, screws, nuts, washers and cotter pin are specifically grouped at the back of this index.

INDEX

PART NUMBER	PAGE	FIGURE NUMBER
GCG 0520	118	57-AN
1019	11	
AGZ 1020	26	12-P
1032	15	
1032-20	15	
1041	16	
1042	16	
1051	19	8-T
1052	19	8-T
1053	19	8-R
1054	19	
F 1055	19	
1061	22	10-L
1062	20	
1063	22	
1075	24	
1076	24	10-AD
1082	26	
1085	29	13-O
1133	21	9-B
1135	17	7-AH
1136	17	7-AN
1137	17	7-AQ
1139	16	7-AE
1139-10	16	7-AE
1139-20	16	7-AE
1139-30	16	7-AE
1139-40	17	7-AE
1140	17	7-AL
1140-10	17	7-AL
1140-20	17	7-AL
1140-30	17	7-AL
1140-40	17	7-AL
1141	16	7-O
1141-10	16	7-O
1141-20	16	7-O
1141-30	16	7-O
1141-40	16	7-O
1142	17	7-AP
1142-10	17	7-AP
1142-20	17	7-AP
1142-30	17	7-AP
1142-40	17	7-AP
1143	16	7-Q
1143-10	16	7-Q
1143-20	16	7-Q
1143-30	16	7-Q
1143-40	16	7-Q
1144	17	7-AR
1144-10	17	7-AR
1144-20	17	7-AR
1144-30	17	7-AR
1144-40	17	7-AR
1145	16	7-S
1145-10	16	7-S
1145-20	16	7-S
1145-30	16	7-S
1145-40	16	7-S
1147	20	8-AL
1147-10	20	8-AL
1147-20	20	8-AL
1147-30	20	8-AL
1147-40	20	8-AL
1148	20	8-AM
1148-10	20	8-AM
1148-20	20	8-AM
1148-30	20	8-AM
1148-40	20	8-AM
1149	20	8-AO
1149-10	20	8-AO
1149-20	20	8-AO
1149-30	20	8-AO
1149-40	20	8-AO
1150	20	8-AP
1150-10	20	8-AP
1150-20	20	8-AP
1150-30	20	8-AP
1150-40	20	8-AP
1159	13	6-AD
1160	13	6-AD
1161	11	6-W
1163	11	6-T
1164	11	6-P
1165	11	6-U
1167	13	6-AJ
1168	13	6-AI
1169-160	13	6-AM
1169-180	13	6-AM
1169-200	13	6-AM
1179	16	7-R
1238	13	6-AF
1281	11	6-N
1283	20	8-AS
1288	11	6-C
1292	17	7-AI
1293	17	7-AM
1298	11	6-V
1299	11	6-R
1301	15	7-D
1301-5	15	7-D
1301-10	15	7-D
1301-20	15	7-D
1301-30	15	7-D
1301-40	15	7-D
1301-50	15	7-D
1301-60	15	7-D
1302	15	7-F
1303	15	7-E
1305	15	7-C
1305-5	15	7-C
1305-10	15	7-C
1305-20	15	7-C
1305-30	15	7-C
1305-40	15	7-C
1305-50	15	7-C
1305-60	15	7-C
1311	17	7-AF
1313	13	7-A
1313-5	13	7-A
1313-10	13	7-A
1313-20	13	7-A
1313-30	13	7-A
1313-40	13	7-A
1313-50	13	7-A
1313-60	13	7-A
1314	15	7-B
1314-5	13	7-B
1314-10	13	7-B
1314-20	13	7-B
1314-30	15	7-B
1314-40	15	7-B
1314-50	15	7-B
1314-60	15	7-B
1321	15	7-I
1321-20	15	7-I

INDEX

PART NUMBER	PAGE	FIGURE NUMBER
1322	15	7-L
1322-20	15	7-L
1324	15	7-J
1325	15	7-M
1417	16	7-X
1422	16	7-AC
1423	16	7-AB
1424	16	7-AD
1424	20	8-AK
1424	75	37-V
1424	100	49-K
1435	16	7-Y
1435	61	29-AD
1436	16	7-W
1441	16	7-U
1442	16	7-AA
1503	20	8-AR
1503-2	20	8-AR
1509	19	8-P
1511	19	8-A
1528	20	8-AH
1532	20	8-AI
1536	19	8-S
1537	19	8-Q
1538	19	8-B
1539	19	8-C
1540	19	8-U
1541	19	8-V
1543	19	8-O
1544	19	8-N
1545	19	8-D
1546	19	8-W
1547	19	8-Y
1548	19	8-Z
1552	19	8-AA
1554	20	8-AQ
1555	20	8-AJ
1556	19	8-I
1557	19	8-X
1559	19	8-E
1559	33	15-U
1562	19	8-AC
1563	19	8-H
1664	22	9-K
1665	22	9-M
1666	22	9-L
1667	21	9-D
1668	21	9-E
1669	21	9-G
1670	21	9-F
1671	21	9-H
1673	21	9-C
1674	22	10-M
1675	22	10-P
1676	22	10-N
1677	22	10-O
1678	22	9-N
1679	22	9-O
1680	22	9-P
1681	22	9-U
1682	22	9-S
1683	22	9-V
1684	22	9-W
1686	24	10-X
1731	24	10-AA
1732	24	10-Z
1739	24	10-AE
1740	24	10-AG
1748	58	27-F
1749	58	27-D
1750	19	8-L
1757	22	10-H
1758	22	10-B
1759	22	10-C
1760	22	10-A
1763	22	10-E
1886	27	12-AB
1887	27	12-AA
1888	27	12-AD
1893	26	12-R
1898	29	13-P
1933	33	15-Q
1941	43	19-AW
1942	33	15-AB
1950	33	15-AD
1951	33	15-W
1952	33	15-V
1952	35	16-E
1953	33	15-T
1954	33	15-Y
1955	33	15-G
1956	35	16-A
1961	26	11-U
2106	44	20-P
2109	46	21-U
2121	44	20-O
2144	120	58-L
2145	46	21-Z
2146	46	21-W
2148	46	21-AA
2149	46	21-X
2154	46	21-B
2342	22	10-Q
2342	37	18-A
2342	39	18-A
2342	40	18-A
2342	43	19-BE
2343	37	18-AF
2343	39	18-AF
2343	40	18-AF
2344	22	10-R
2344	44	20-N
2345	24	10-S
2345	44	20-E
2466	35	17-G
KB 2509	35	16-G
KB 2821	29	13-R
2822	29	13-Y
KC 3042	79	39-K
KC 3044	79	39-L
KC 3045	79	39-I
KB 3101	61	29-N
KB 3111	61	29-AE
KB 3112	61	29-AI
KB 3114	62	29-AJ
3117	61	29-AB
KB 3119	62	29-AK
KB 3120	61	29-AH
KB 3131	61	29-S
KB 3134	61	29-P
KB 3135	61	29-J
KB 3136	69	33-AF
KB 3137	61	29-K
3229	69	33-AG
3242	67	33-J

PART NUMBER	PAGE	FIGURE NUMBER
3242	75	37-K
3250	71	34-AH
3273	71	34-AJ
3278	71	34-Y
3279	71	34-AL
3280	69	34-B
3282	71	34-V
3282	75	37-Z
3285	69	33-W
3286	69	33-AH
3294	69	34-D
3295	69	33-AL
3296	69	33-AK
3291	71	34-W
3291	75	37-AA
3293	71	34-AK
3297	67	33-T
KC 3404	79	39-J
KC 3407	79	39-B
AKC3407	79	
KC 3408	79	39-C
KC 3409	79	39-D
KC 3410	79	39-E
KB 3411	79	39-A
KC 3411	79	39-F
KC 3412	79	39-G
KC 3423	75	36-AL
3508	84	42-E
3508	91	42-E
3516	86	42-V
3516	92	42-V
3520	84	42-D
3520	91	42-D
3521	84	42-B
3521	91	42-B
3576	84	42-G
3576	91	42-G
3606	86	43-H
AE 3607	86	43-N
AE 3607	97	47-AY
3611	83	41-S
3611	89	45-M
3624	86	43-A
KB 4011	11	6-Y
KB 4052	102	49-BB
KB 4053	84	42-N
KB 4053	91	42-N
KB 4054	64	31-H
KB 4125	11	6-AB
KB 4125	109	53-I
KB 4125	111	54-F
4415	86	43-F
KB 4446	105	51-O
4492	103	50-K
KB 4507	101	49-AJ
4535	101	49-AC
4619	44	20-G
4631	46	20-T
4675	46	20-U
KC 4706	79	38-W
KC 4712	79	38-AA
KC 4713	79	38-AB
5110	48	22-H
5142	48	22-O
5143	48	22-P
5145	48	22-R
5146	48	22-S
5147	48	22-T
5180B	48	22-AG
5181B	48	22-AF
5261	54	24-AB
5265	52	24-S
5266	52	24-R
5267	52	24-Q
5270	52	24-P
5271	52	24-T
5307	122	59-O
5314	31	14-N
5339	31	14-T
5407	31	14-W
5416	31	14-A
5502	31	14-G
BRT 6306	75	37-A
KB 7601	29	13-S
BX 11100	11	
BX 11101	11	
BX 11112	11	6-J
F 11151	31	14-Y
S 11187	77	38-B
B 11212	11	6-K
B 11302	11	6-A
F 11371	11	6-I
B 11401	13	
B 11412	13	6-AG
BX 11461	11	6-O
S 11472	13	6-AH
BX 11551	13	6-AN
B 11710	16	
B 11710-10	16	
B 11710-20	16	
B 11710-30	16	
B 11710-40	16	
11718	17	7-AS
11718-10	17	7-AS
11718-20	17	7-AS
11718-30	17	7-AS
11718-40	17	7-AS
11754	17	7-AW
BX 11773	17	7-AU
BX 11775	17	7-AG
BX 11776	17	7-AV
11791	17	7-AZ
BX 11793	17	7-AY
11794	17	7-AX
BX 11795	17	7-AK
BX 11795-5	17	7-AK
BX 11795-10	17	7-AK
BX 11796	17	7-AO
BX 11796-5	17	7-AO
BX 11796-10	17	7-AO
BX 11797	17	7-AT
BX 11797-5	17	7-AT
BX 11797-10	17	7-AT
F 11810	20	
F 11810-10	20	
F 11810-20	20	
F 11810-30	20	
F 11810-40	20	
12100	11	6-S
F 12101	11	6-D
F 12101	29	
12103	13	6-AE
B 12104	11	6-B
12113	11	6-G
12121	24	10-Y

INDEX

PART NUMBER	PAGE	FIGURE NUMBER
F 12151	29	13-X
F 12211	11	6-L
F 12231	11	6-M
F 12302	11	
2BJ 12311	11	6-Q
BX 12401	13	6-AK
2BJ 12611	13	6-AL
2BJ 12612	13	6-AL
2BJ 12700	13	
2BJ 12701	13	6-AC
BJ20 12801	31	14-X
F 12802	31	14-Z
BJ20 12810	31	
BX 12820	31	14-E
F 12821	31	14-AA
13001	13	
13001-5	13	
13001-10	13	
13001-20	13	
13001-30	13	
13001-40	13	
13001-50	13	
13001-60	13	
B 13301	15	
B 13301-5	15	
B 13301-10	15	
B 13301-20	15	
B 13301-30	15	
B 13301-40	15	
B 13301-50	15	
B 13301-60	15	
F 13691	15	7-G
BX 13771	15	7-K
B 14010	19	
B 14020	19	
14111	16	7-P
B 14112	16	7-P
14141	16	7-T
14142	16	7-Z
14161	16	7-V
BX 14301	20	
BX 14311	20	8-AN
BX 14511	20	8-AG
BX 14521	20	8-AF
F 14531	19	8-AD
F 14551	19	8-AB
F 14552	19	8-AE
F 15312	19	8-M
F 15333	19	8-K
F 15352	22	10-F
F 15401	22	
BQ 15401	24	
BX 15402	22	
BQ 15402	24	
F 15412	22	10-G
BQ 15412	24	10-U
BQ 15413	24	10-T
15604	26	11-S
15606	24	11-M
15616	26	11-V
15620	24	
15644	24	11-I
15646	24	11-G
15658	24	11-H
S 15664	26	11-T
15665	24	11-J
15674	24	11-L
15697	24	11-K
FQS 16110	26	
BX 16112	26	12-N
16115	22	10-I
16118	22	9-T
BX 16130	26	
FQS 16181	26	12-L
F 16191	27	12-AC
F 16210	26	12-G
BX 16311	29	13-N
BX 16312	26	12-F
2BJ 16411	26	12-E
BX 16411	26	12-K
2BJ 16412	29	13-L
BX 16413	26	12-H
BX 16415	26	12-I
F 16451	26	12-A
BX 16452	26	12-O
B 16550	26	12-B
B 16560	28	13-B
FJ 17111	33	15-J
FX 17151	33	15-AC
BX 17200	33	
B 17201	33	15-R
BX 17211	33	15-P
F 17211	33	15-B
F 17212	33	15-D
BX 17213	33	15-N
BX 17216	33	15-K
BX 17217	33	15-O
BX 17221	33	15-S
F 17301	33	
F 17341	33	15-C
F 17342	33	15-A
F 17346	24	10-AF
BX 17461	33	15-I
BX 17462	33	15-H
18101	26	12-J
BX 18111	48	22-V
BX 18112	48	22-C
BX 18141	52	24-M
18161	26	12-Z
18162	26	12-Y
18163	26	12-W
18164	26	12-U
18165	26	12-S
18166	26	12-X
18167	26	12-T
18168	26	12-V
18169	26	12-M
18170	26	12-Q
F 18181	44	20-Q
F 18200	31	
F 18201	31	14-D
BJ 18206	31	14-R
F 18295	31	14-C
BJ25 18311	118	57-AO
BQ 18321	35	17-M
BL 18373	24	11-A
B 18381	58	27-B
BQ 18381	24	11-B
BQ 18382	24	11-C
BQ 18383	26	11-R
BQ 18384	24	11-N
BX 18402	44	
BX 18501	44	
BQ 18601	58	
BQ 18611	58	27-E

PART NUMBER	PAGE	FIGURE NUMBER
BX 21101	24	
BX 21111	24	10-W
F 21112	24	10-V
2BJ 22100	29	13-K
BJ 22103	29	13-Q
2BJ 22161	29	13-Z
BD 22166	29	13-I
FA 22201	29	13-J
FA 22242	29	13-W
2BJ 22313	28	13-C
2BJ 22313	28	13-E
BJ 22343	28	13-D
2BJ 23101	35	
2BJ 23111	35	16-F
BJ 23130	35	16-K
2BJ 23181	35	16-L
2BJ 23211	35	16-R
BL 23211	35	16-O
F 23213	35	16-B
BQ 23214	35	16-N
F 23214	35	16-C
F 23215	35	16-D
BL 23216	35	16-P
BJ 23221	35	16-Q
2BJ 23301	35	17-E
F 23301	35	17-A
2BJ 23302	35	17-B
BX 23302	35	17-D
2BJ 23310	35	
2BJ 23320	35	
FA 23329	35	17-F
2BJ 23331	35	17-C
BJ25 25101	44	20-D
BY 25105	44	20-A
BJ25 25110	44	
BJ25 25114	44	20-F
BY 25164	44	20-B
BJ25 25201	44	
BJ25 25202	46	20-V
BJ25 25211	44	20-L
BJ25 25212	44	20-M
SB 25264	44	20-R
A-F 25400	39	
K-F 25400	37	
N-F 25400	40	
F 25411	37	18-R
F 25411	39	18-R
F 25411	40	18-R
A-B 25412	39	18-AA
K-B 25412	37	18-AA
N-B 25412	40	18-AA
F 25413	37	18-T
F 25413	39	18-T
F 25413	40	18-T
A-B 25414	39	18-F
K-B 25414	37	18-F
N-B 25414	40	18-F
A-BX 25415	39	18-I
K-BX 25415	37	18-I
N-BX 25415	40	18-I
F 25417	37	18-S
F 25417	39	18-S
F 25417	40	18-S
F 25418	37	18-Q
F 25418	39	18-Q
F 25418	40	18-Q
F 25419	37	18-P
F 25419	39	18-P
F 25419	40	18-P
A-B 25420	39	
K-B 25420	37	
N-B 25420	40	
A-B 25421	39	18-J
K-B 25421	37	18-J
N-B 25421	40	18-J
A-B 25422	39	18-M
K-B 25422	37	18-M
N-B 25422	40	18-M
A-B 25423	39	18-L
K-B 25423	37	18-L
N-B 25423	40	18-L
A-B 25424	39	18-K
K-B 25424	37	18-K
N-B 25424	40	18-K
BX 25430	37	18-G
BX 25430	39	18-G
BX 25430	40	18-G
A-BX 25439	39	18-H
K-BX 25439	37	18-H
N-BX 25439	40	18-H
A-B 25440	39	18-E
K-B 25440	37	18-E
N-B 25440	40	18-E
A-B 25447	39	18-D
K-B 25447	37	18-D
N-B 25447	40	18-D
F 25448	37	18-C
F 25448	39	18-C
F 25448	40	18-C
A-B 25449	39	18-B
K-B 25449	37	18-B
N-B 25449	40	18-B
A-B 25450	39	18-U
K-B 25450	37	18-U
N-B 25450	40	18-U
A-B 25461	39	18-W
K-B 25461	37	18-W
N-B 25461	40	18-W
A-B 25462	39	18-X
K-B 25462	37	18-X
N-B 25462	40	18-X
A-B 25463	39	18-Y
K-B 25463	37	18-Y
N-B 25463	40	18-Y
A-B 25464	39	18-Z
K-B 25464	37	18-Z
N-B 25464	40	18-Z
A-B 25465	39	18-V
K-B 25465	37	18-V
N-B 25465	40	18-V
A-B 25470	39	18-AC
K-B 25470	37	18-AC
N-B 25470	40	18-AC
A-B 25474	39	18-AE
K-B 25474	37	18-AE
N-B 25474	40	18-AE
A-B 25475	39	18-AB
K-B 25475	37	18-AB
N-B 25475	40	18-AB
A-B 25476	39	18-AD
K-B 25476	37	18-AD
N-B 25476	40	18-AD
A-B 25477	39	18-N
K-B 25477	37	18-N
N-B 25477	40	18-N

INDEX

PART NUMBER	PAGE	FIGURE NUMBER
A-B 25478	39	18-O
K-B 25478	37	18-O
N-B 25478	40	18-O
A-B 25480	40	
K-B 25480	37	
N-B 25480	41	
A-B 25481	40	18-AJ
K-B 25481	37	18-AJ
N-B 25481	41	18-AJ
A-B 25482	39	18-AG
K-B 25482	37	18-AG
N-B 25482	41	18-AG
A-B 25483	39	18-AI
K-B 25483	37	18-AI
N-B 25483	41	18-AI
A-B 25484	39	18-AH
K-B 25484	37	18-AH
N-B 25484	41	18-AH
N-BX 25500	41	
BX 25502	43	
N-B 25511	44	19-BV
BX 25512	43	19-AI
A-BX 25513	43	19-BF
N-B 25514	43	19-BG
N-BX 25515	41	19-C
N-B 25516	43	19-AN
A-B 25517	41	19-A
A-B 25520	43	19-BB
N-B 25523	43	19-AQ
BX 25525	43	19-BJ
N-B 25526	43	19-BI
N-B 25527	43	19-BH
BX 25528	43	19-BL
BX 25529	43	19-BK
N-B 25530	43	19-BP
A-B 25533	43	19-BO
BX 25541	41	19-M
BX 25541-1	41	19-M
N-B 25542	44	19-BR
N-B 25543	44	19-BS
N-B 25546	43	19-AX
N-B 25547	43	19-AY
A-B 25548	43	19-AT
A-B 25549	43	19-AU
A-B 25551	44	19-BX
A-B 25552	44	19-BW
A-B 25553	44	19-BZ
N-B 25554	44	19-BY
N-B 25560	43	19-BM
A-B 25561	41	19-O
A-B 25562	41	19-P
A-B 25563	41	19-Q
A-B 25564	41	19-R
A-B 25565	41	19-S
A-B 25566	41	19-T
A-B 25567	41	19-U
A-B 25568	41	19-V
N-B 25570	43	19-AO
A-B 25573	44	19-BQ
A-B 25574	44	19-BU
A-B 25575	41	19-N
A-B 25576	43	19-BN
N-B 25577	41	19-L
BX 25578	41	19-J
A-B 25579	41	19-G
N-B 25580	43	19-AP
A-B 25582	43	19-BD
N-B 25583	43	19-BC
BX 25587	41	19-K
N-B 25590	43	19-AR
N-B 25610	43	
A-B 25611	43	19-AV
N-B 25612	43	19-AS
A-B 25613	41	19-AE
N-B 25614	43	19-AG
A-B 25615	41	19-AC
A-B 25616	41	19-AD
A-B 25617	44	19-CC
A-B 25618	43	19-BA
A-B 25619	43	19-AZ
A-BX 25620	43	
BX 25621	43	19-AH
BX 25622	43	19-AJ
BX 25623	41	19-W
A-B 25624	41	19-Y
A-B 25625	41	19-X
BX 25626	43	19-AK
BX 25629	43	19-AM
BX 25631	43	19-AL
N-B 25632	41	19-Z
A-B 25641	41	19-F
A-B 25642	41	19-H
A-B 25644	41	19-I
N-B 25645	41	19-AB
N-B 25646	41	19-B
A-B 25647	41	19-AA
N-B 25656	44	19-CB
N-B 25657	44	19-CA
N-B 25659	41	19-E
A-S 25661	41	19-D
BX 25662	43	19-AF
BX 25663	44	19-BT
2BJ 26201	46	21-M
BJ25L 26201	48	21-AO
FA 26201	46	21-S
2BJ 26202	46	
BJ25L 26202	48	21-AN
BJ 26203	46	
2BJ 26203	46	
BX 26211	46	21-K
2BJ 26212	46	21-N
2BJ 26213	46	21-AC
FA 26213	46	21-AF
2BJ 26214	46	21-Y
FA 26214	46	21-AE
2BJ 26215	46	21-AB
FA 26215	46	21-R
2BJ 26216	46	21-AD
BJ25L 26217	47	21-AJ
BJ25L 26218	48	21-AM
BJ25L 26219	47	21-AH
BJ 26221	46	21-H
BX 26221	46	21-I
BJ 26222	46	21-F
BJ 26226	46	21-C
RK 26251	62	30-I
BRT 26820	96	47-V
BX 27000	48	
BX 27005	48	22-AD
A 27010C	54	22-AF
BX 27010	50	22-AQ
A 27013	52	24-U
A 27015	52	24-V
BX 27100	50	
BX 27101	50	22-AN

INDEX

PART NUMBER	PAGE	FIGURE NUMBER
BX 27102	50	22-AL
BX 27104	50	22-AM
A 27111S	48	22-W
BX 27112	48	22-AB
BL 27120A	50	22-AP
BX 27200A	48	22-J
BL 27202	48	22-N
A 27203	48	22-L
A 27204	48	22-M
BX 27311	48	22-K
BX 27400	48	
BX 27401	48	22-A
BX 27404	48	22-Q
BX 27500	50	
B 27501	50	22-AU
B 27502	48	22-AC
A 27503	50	22-AW
A 27510A	48	22-B
BX 27600	50	22-AV
F 27600	31	14-F
BX 27608A	50	22-AR
BX 27609	50	22-AS
BX 27610	50	22-AT
BX 27700	50	
A 27710	52	23-P
BX 27710	50	
A 27712	50	23-D
A 27713	52	23-S
A 27719	52	23-T
A 27719B	50	23-O
A 27720	50	23-G
A 27726	52	23-U
A 27740	50	23-L
A 27740	129	63-AA
A 27746	50	23-M
BX 27760	50	
BX 27770	50	
A 27779A	52	23-R
A 27780	52	23-Q
A 27796	52	23-Y
A 27797	52	23-X
A 27830B	52	23-Z
A 27832B	52	23-AA
A 27835	52	23-AB
BXL 28000	52	
A 28005	54	24-Y
A 28100L	54	
A 28101L	54	24-AI
A 28110L	54	24-AG
A 28120L	54	24-X
BXL 28400	52	
A 28401L	52	24-L
BXL 28416	52	24-F
A 28418L	52	24-G
S 28712B	54	24-AP
BXL 28740	52	24-D
S 28744B	52	24-C
RH 28760	56	25-Y
BX 28800	31	14-M
RH 28800A	54	
RH 28801	54	25-N
RH 28802	54	25-C
RH 28805	56	25-AG
S 28811	52	24-E
RH 28841	54	25-M
RH 28842	54	25-P
RH 28845	56	25-AD
RH 28847	54	25-H
RH 28848	56	25-AC
RH 28851	56	25-AF
RH 28856	54	25-O
RH 28859	56	25-AE
RH 28861	56	25-X
RH 28862	56	25-S
RH 28864	56	25-U
RH 28872	56	25-AN
RH 28873	56	25-AM
RH 28881	56	25-AI
RH 28900B	54	
RH 28941	56	25-Z
A 29100	56	
F 29400	58	27-C
F 29500	31	14-B
BRT 30203	94	46-AH
BRT 30203	96	47-O
KC 30412	79	
BJ 31010	61	
BX 31101	61	29-X
BX 31102	61	29-F
BX 31135	61	29-G
BX 31201	61	
FA 31202	61	29-R
BX 31210	61	
BX 31212	61	29-O
BX 31213	61	29-AG
BX 31215	61	29-AF
FA 31240	61	29-Q
BX 31301	61	29-H
BX 31302	61	29-W
BRT 31307	84	42-K
BRT 31307	91	42-K
BX 31311	61	29-J
BX 31312	61	29-I
RS 31316	61	29-AA
2BJ 31317	62	30-W
BX 31334	61	29-V
2BJ 31401	62	30-Z
2BJ 31405	62	
BJ25L 31405	62	
2BJ 31410	64	
2BJ 31413	62	30-K
2BJ 31415	62	30-J
2BJ 31416	62	30-H
2BJ 31417	62	30-F
2BJ 31420	62	
2BJ 31427	62	30-R
BJ25L 31427	62	30-R
BJ25L 31428	62	30-R
2BJ 31465	64	31-X
2BJ 31471	62	30-U
RS 31473	62	30-T
RS 31473	107	52-S
2BJ 31481	64	30-AE
2BJ 31482	64	30-AG
2BJ 31483	64	30-AF
2BJ 31484	64	30-AI
2BJ 31485	64	30-AH
2BJ 31486	64	30-AK
RS 31488	62	30-AD
RS 31488	105	52-A
RS 31491	62	30-AB
RS 31491	105	51-L
32103	67	33-C
32104	67	33-D
32109	69	34-C

INDEX

PART NUMBER	PAGE	FIGURE NUMBER
32110	71	34-U
32110	77	37-AE
32115	69	34-A
32127	69	33-AJ
32127	73	36-AD
2BJ 33000	67	
BJ25L 33000	67	
2BJ 33100	67	
BJ 33101	73	
2BJ 33101	73	
2BJ 33103	67	
2BJ 33111	69	33-AI
BJ 33142	73	36-H
BJ 33143	73	36-G
2BJ 33143	73	36-G
2BJ 33160	67	
BJ 33161	73	36-P
2BJ 33161	67	33-S
BX 33163	67	33-P
2BJ 33166	67	33-V
2BJ 33167	67	33-U
2BJ 33211	69	33-AB
2BJ 33212	69	33-AC
2BJ 33213	67	33-M
SB 33213	75	37-L
2BJ 33214	67	33-K
2BJ 33215	69	33-AA
2BJ 33216	69	33-Z
2BJ 33217	67	33-L
2BJ 33301	69	
2BJ 33302	69	
2BJ 33311	69	34-E
2BJ 33331	71	34-X
FA 33332	69	34-H
BJ 33333	75	37-D
2BJ 33333	69	34-I
2BJ 33335	69	34-N
2BJ 33337	69	34-F
2BJ 33351	71	34-T
2BJ 33352	69	34-R
2BJ 33353	71	34-S
2BJ 33354	69	34-Q
FA 33361	69	34-M
FA 33362	69	34-J
FA 33363	69	34-K
FA 33364	69	34-O
FA 33365	69	34-G
FA 33366	69	34-P
FA 33368	69	34-L
FA 33369	69	34-L
2BJ 33401	71	
RH 33401	75	37-P
2BJ 33402	71	
SB 33404	73	36-V
2BJ 33411	71	34-AF
BM 33416	71	34-AM
2BJ 33431	71	34-Z
2BJ 33432	71	34-AA
2BJ 33433	71	34-AD
2BJ 33434	71	34-AC
2BJ 33435	71	34-AE
2BJ 33437	71	34-AB
2BJ 33441	71	34-AG
BJ 33452	71	34-AN
2BJ 33455	71	34-AI
BJ 33481	73	36-D
BX 33484	75	37-Q
BJ 33485	75	37-C
FA 33485	73	36-W
RH 33485	75	37-S
BJ 33486	75	37-B
BX 33486	75	37-O
RH 33486	75	37-T
BJ 33487	75	37-N
SB 33487	73	36-C
2BJ 33502	67	33-A
2BJ 33503	67	
2BJ 33510	67	
2BJ 33511	67	33-B
SG 33523	67	33-F
SG 33524	67	33-I
SG 33525	67	33-G
SG 33526	67	33-H
BM 33528	67	33-E
FA 33531	67	33-N
2BJ 34000	73	
BQ 34101	73	36-J
BJ 34111	73	36-AC
BJ 34132	73	36-O
BJ 34133	75	36-AF
BJ 34134	75	36-AE
BQ 34135	73	36-N
BJ 34351	75	37-E
BJ 34411	77	37-AD
BJ 34412	75	36-AG
BJ 34413	73	36-AB
BJ 34414	73	36-AA
BJ 34415	75	36-AJ
BJ 34416	75	36-AK
BJ 34418	77	37-AC
BJ 34431	77	37-AB
2BJ 34501	75	
2BJ 34502	75	37-F
2BJ 34511	77	37-AH
BJ 34512	77	37-AG
2BJ 34513	77	37-AF
BJ 34514	75	37-H
BJ 34515	77	37-AJ
BJ 34516	77	37-AK
BJ 34517	75	37-M
2BJ 34518	75	37-G
2BJ 34519	77	37-AM
BJ 34522	75	37-J
BJ 34611	75	37-W
BJ 34612	73	36-R
BJ 34613	73	36-Y
BJ 34614	73	36-Z
BJ 34615	75	37-X
BJ 34631	75	37-Y
36114	86	43-P
36114	87	47-AJ
2BJ 37103	79	39-M
BJ 37104	79	39-M
2BJ 37400	79	
RK 37402	94	46-AN
BJ 37500	79	
40515	97	47-AQ
2BJ 41000	84	
2BJ 41000	91	
2BJ 41101	83	
2BJ 41111	83	41-AB
2BJ 41111	91	45-AD
BJ 41121	84	42-O
BJ 41121	91	42-O
BJ 41191	84	41-AF

PART NUMBER	PAGE	FIGURE NUMBER
BJ 41191	91	45-AH
BJ 41201	84	41-AD
BJ 41201	91	45-AF
BJ 41202	84	
BJ 41202	91	
BJ 41211	84	42-I
BJ 41211	91	42-I
BJ 41212	84	42-J
BJ 41212	91	42-J
BJ 41213	84	42-J
BJ 41213	91	42-J
BJ 41214	84	42-J
BJ 41214	91	42-J
BJ 41215	84	42-J
BJ 41215	91	43-J
BJ 41216	84	42-J
BJ 41216	91	42-J
BJ 41217	84	42-M
BJ 41217	91	42-M
BJ 41218	84	42-M
BJ 41218	91	42-M
BJ 41219	84	42-M
BJ 41219	91	42-M
RK 41221	84	42-L
RK 41221	91	42-L
BJ 41222	84	41-AE
BJ 41222	91	45-AG
BJ 41223	84	42-M
BJ 41223	91	42-M
BJ 41251	86	42-X
BJ 41251	92	42-X
SB 41252	86	42-Y
SB 41252	92	42-Y
BJ 41302	86	
BJ 41302	92	
RS 41312	84	42-R
RS 41312	92	42-R
SB 41312	86	42-U
SB 41312	92	42-U
SG 41312	84	42-H
SG 41312	91	42-H
RS 41313	86	42-AA
RS 41313	92	42-AA
SG 41313	84	42-H
SG 41313	91	42-H
BJ 41315	86	42-W
BJ 41315	92	42-W
SG 41351	84	42-C
SG 41351	91	42-C
SG 41352	84	42-A
SG 41352	91	42-A
FA 41417	75	36-AH
FA 41417	86	43-D
2BJ 42000	83	
2BJ 42101	83	41-Z
2BJ 42110	83	
BJ 42113	83	41-X
2BJ 42114	83	41-Y
2BJ 42114	89	45-V
2BJ 42115	83	41-Q
2BJ 42115	89	45-S
BJ 42116	83	41-AA
BJ 42116	91	45-AC
2BJ 42116	83	41-Q
2BJ 42116	89	45-S
BQ 42121	73	36-K
RS 42121	84	41-AG
RS 42121	91	45-AB
SKB 42121	83	41-V
BM 42122	73	36-L
BM 42122	83	41-T
BM 42122	89	45-Z
BJ 42171	83	41-D
BJ 42171	89	45-O
2BJ 42173	83	41-C
2BJ 42173	89	45-N
RS 42174	83	41-R
RS 42174	89	45-L
SB 42211	86	43-I
SB 42310	86	43-C
SB 42351	86	43-B
SB 42401	86	43-J
SB 42410	86	
SB 42471	86	43-E
SB 42471	97	47-AO
SB 42491	103	50-C
2BJ 43000	89	
BJ25L 43000	89	
2BJ 43101	89	45-W
BJ 43105	89	45-U
BJ 43106	89	
BJ 43107	89	
RS 43108	92	46-H
2BJ 43110	89	
BJ 43113	96	47-R
BJ 43114	96	47-B
BJ 43115	96	47-B
43118	79	39-H
43118	94	46-AM
43119	61	29-C
2BJ 43201	94	
BJ25L 43201	94	
BJ 43202	96	47-E
BJ 43203	96	
BJ 43205	97	47-AL
BJ 43211	96	47-P
BJ 43212	96	47-P
BJ 43213	96	47-H
BJ 43214	96	47-H
BJ 43215	96	47-AB
BJ 43216	96	47-N
BJ 43217	96	47-N
BJ 43218	96	47-M
BJ 43222	96	47-G
BJ 43223	96	47-F
BJ 43224	96	47-T
BJ 43225	96	47-S
BJ 43227	97	47-AK
BJ 43228	96	47-AA
BJ 43229	96	47-Y
BJ 43233	97	47-AN
BJ 43234	96	47-I
BJ 43235	97	47-AM
BJ 43236	96	47-L
2BJ 43250	92	
BJ25L 43250	92	
2BJ 43251	94	46-AP
2BJ 43252	94	46-AR
BJ25L 43252	94	46-AR
SB 43266	94	46-AD
BJ 43311	96	47-A
BJ 43312	96	47-A
BJ 43313	96	47-D
BJ 43314	97	47-AV
BJ 43315	97	47-AU

INDEX

PART NUMBER	PAGE	FIGURE NUMBER
BJ 43316	97	47-AW
BJ 43317	97	47-AH
BJ 43318	96	47-Q
BJ 43351	96	47-C
BJ 43401	97	47-AX
BJ 43410	97	
BJ 43412	97	47-AP
BJ 43413	97	47-AS
BJ 43414	97	47-AR
BJ 43415	97	47-AT
BM 43415	96	47-U
2BJ 43512	89	45-V
2BJ 43513	89	45-R
2BJ 43514	89	45-Q
BJ 43515	89	45-T
BJ 44000	86	
BJ 44000	97	
BJ 44101	86	
BJ 44101	97	
BJ 44102	86	43-O
BJ 44102	97	47-AI
44104	103	50-D
44123	103	50-F
44134	62	30-AA
BJ 44141	86	
BJ 44141	97	
44154	86	43-G
BJ 44161	86	
BJ 44161	97	
44216	103	50-M
44217	103	50-S
44218	103	50-R
44219	103	50-T
44323-19	105	51-I
44324-9	105	51-M
44324-10	64	31-AB
44324-10	105	51-N
44347-1	105	51-F
44347-2	105	51-B
44347-4	105	51-E
44347-5	105	51-A
44347-10	64	31-Z
44351	64	
44351-1	64	31-J
44351-2	64	31-K
44351-5	64	31-I
44351-6	64	31-Y
44351-7	64	31-W
44351-8	64	31-E
44351-9	64	31-F
44351-10	64	31-G
44351-11	64	31-N
44351-12	64	31-Q
44351-13	64	31-S
44351-14	64	31-R
44351-15	64	31-O
44351-16	64	31-M
44351-17	64	31-L
44351-19	64	31-C
44351-20	64	31-D
44351-21	64	31-B
44351-23	64	31-AA
44351-24	64	31-AC
44351-25	64	31-P
44352	105	52-H
44354	107	52-N
44355	107	52-Z
44356	62	30-S
44356	107	52-Y
44365	103	50-P
44371	86	43-M
44371	96	47-AG
2BJ 45000	100	
BJ25L 45000	100	
2BJ 45100	100	
BJ25L 45100	100	
2BJ 45101	101	
BJ25 45101	100	49-N
BJ25L 45101	101	
RS 45102	101	
BM 45105	100	49-P
BJ25 45110	100	
45112	101	49-AE
BM 45131	100	49-R
BM 45133	100	49-O
BM 45135	100	49-S
BM 45136	100	49-Q
2BJ 45152	102	49-BC
RS 45152	102	49-BC
2BJ 45170	101	
RKL 45170	101	
2BJ 45171	102	49-BA
RKL 45171	101	49-AU
2BJ 45172	101	49-AU
RS 45172	101	49-AQ
RS 45173	101	49-AO
RS 45174	101	49-AM
2BJ 45201	100	
RKL 45201	100	
RKL 45202	101	
RKL 45203	100	49-W
2BJ 45211	100	49-Z
RKL 45211	101	49-Z
RKL 45212	100	49-X
KB 45215	101	49-AP
BM 45217	101	49-AN
RS 45223	101	49-AV
RS 45231	101	49-AH
RS 45232	101	49-AI
RS 45233	101	49-AI
RKL 45241	101	49-AX
RKL 45242	101	49-AW
RKL 45243	101	49-AY
RKL 45244	101	49-AT
RKL 45245	101	49-AS
RS 45245	100	49-Y
RKL 45246	101	49-AS
RKL 45247	101	49-AS
BJ 45270	100	49-J
2BJ 45271	100	49-I
2BJ 45301	94	46-O
RR 45301	94	
2BJ 45302	94	
RS 45302	94	
2BJ 45320	92	
2BJ 45330	92	
BJ25L 45330	92	
2BJ 45332	92	46-F
RS 45332	94	46-T
SG 45332	92	46-K
2BJ 45333	92	46-G
RS 45333	94	46-S
SG 45333	92	46-L
2BJ 45334	92	46-I
RS 45334	94	46-R

PART NUMBER		PAGE	FIGURE NUMBER
SG	45334	92	46-J
RS	45335	94	46-Q
SG	45335	92	46-M
2BJ	45336	94	46-AO
RS	45336	94	46-AA
BJ	45337	94	46-AB
BJ25L	45337	94	46-AB
2BJ	45338	92	46-B
BJ	45339	94	46-AG
2BJ	45340	92	
BJ	45341	94	46-AF
BJ	45342	94	46-AE
BJ	45343	94	46-AK
2BJ	45344	92	46-A
BJ25L	45344	92	46-A
2BJ	45346	94	46-AQ
2BJ	45350	92	
RS	45352	94	46-V
RR	45354	94	46-Z
RS	45354	94	46-W
RS	45355	94	46-P
2BJ	45401	101	
2BJ	45411	101	49-AF
RKL	45412	100	49-V
2BJ	46101	77	37-AL
FA	46101	77	38-J
2BJ	46102	77	38-M
2BJ	46103	77	38-N
2BJ	46110	77	
BJ25L	46110	77	
2BJ	46111	77	38-O
FA	46118	77	38-L
2BJ	46121	77	37-AO
BX	46121	77	38-R
FA	46125	77	38-K
BX	46142	77	38-E
SB	46205	79	38-Y
BJ	46211	79	38-AF
2BJ	46231	77	38-S
BJ25L	46231	77	38-S
BX	46231	77	38-D
BJ	46232	79	38-Z
BX	46232	77	38-H
BX	46233	77	38-G
BX	46234	77	38-I
BX	46238	77	38-F
BX	46239	62	30-N
BX	46239	77	38-C
SB	46250	79	
SB	46271	79	38-AE
BJ	47010	103	
SB	47020	103	
2BJ	47101	62	30-G
SB	47105	64	31-A
SKB	47203	62	30-V
SKB	47203	105	52-B
2BJ	47204	105	
BJ25L	47204	107	
2BJ	47205	105	
2BJ	47206	107	
2BJ	47207	105	
SKB	47208	107	
SKB	47209	107	
2BJ	47211	105	52-J
BJ25L	47211	107	52-AL
2BJ	47212	105	52-F
BJ25L	47212	107	52-AK
2BJ	47213	107	52-R
2BJ	47214	105	52-K
SKB	47215	107	52-M
SKB	47216	107	52-O
BJ	47219	105	52-E
BJ	47222	105	52-D
BJ	47223	105	52-C
2BJ	47281	107	52-T
BJ25L	47281	107	52-AG
SKB	47281	107	52-L
2BJ	47282	107	52-T
BJ25L	47282	107	52-AF
2BH	47283	105	52-I
2BJ	47283	105	52-G
BJ25L	47283	107	52-AE
SKB	47287	107	52-P
SKB	47289	107	52-Q
BJ	47301	103	
SB	47302	103	50-H
BJ	47311	103	50-C
SB	47313	103	50-B
SB	47314	103	50-I
SB	47315	103	50-J
SB	47316	103	50-J
SB	47317	103	50-A
SB	47319	103	50-E
SB	47350	103	
RK	47391	103	50-Q
SB	47391	86	43-K
SB	47391	96	47-AE
SB	47392	79	38-X
SB	47392	103	50-L
SB	47401	103	
BJ	47500	105	
RK	47502	105	
SB	47558	105	51-J
BHR	47570	105	
RK	47572	105	51-C
RK	47575	105	51-D
RK	47584	62	30-AC
RK	47584	105	51-K
2BJ	48101	109	53-U
2BJ	48102	111	54-AA
2BJ	48261	109	53-R
2BJ	48261	111	54-L
2BJ	48301	111	54-J
2BJ	48302	109	53-V
2BJ	48303	109	
2BJ	48303	111	
2BJ	48304	109	
2BJ	48304	111	
2BJ	48305	109	53-V
2BJ	48311	109	53-C
2BJ	48311	111	54-P
RR	48312	109	53-T
RR	48312	111	54-S
RS	48331	109	53-A
RS	48331	111	54-O
RS	48332	109	53-D
RS	48332	111	54-R
2BJ	48361	109	53-O
2BJ	48361	111	54-K
2BJ	48362	109	53-O
2BJ	48374	111	54-V
2BJ	48510	109	53-W
2BJ	48501	109	53-H
2BJ	48502	111	54-E
RS	48505	109	53-K

INDEX

PART NUMBER	PAGE	FIGURE NUMBER
2BH 48520	111	54-H
2BJ 48523	111	54-T
2BJ 48525	111	54-U
SA 48586	109	53-J
SA 48586	111	54-G
2BH 48601	89	45-K
2BJ 48601	83	41-M
2BH 48621	83	41-E
2BJ 48621	89	45-P
2BJ 48622	89	45-E
RR 48622	83	41-N
RR 48622	89	45-C
2BH 48623	83	41-H
2BJ 48623	89	45-H
2BH 48624	83	41-G
RR 48626	83	41-O
RR 48626	89	45-B
RR 48627	83	41-P
RR 48627	89	45-A
BJ20 51100	113	
BJ25L 51110	113	
BJ20 51101	113	55-N
SB 51127	113	55-I
BJ20 51211	113	55-K
BJ20 51212	113	55-K
BJ20 51213	113	55-M
BJ20 51214	113	55-M
BJ20 51215	113	55-Q
2BJ 51301	109	53-B
2BJ 51301	111	54-Q
2BJ 51302	109	53-S
BJ20 51304	113	55-X
BJ20 51306	113	55-AA
BJ20 51311	113	55-A
BJ20 51312	113	55-U
BJ 51313	113	55-T
BJ20 51313	113	55-F
BJ20 51315	113	55-P
BJ20 51316	113	55-P
BJ20 51331	113	55-L
BJ20 51332	113	55-V
BJ25L 51332	113	55-V
BJ20 51351	113	55-Y
BJ20 51352	113	55-Z
2BJ 51375	111	54-A
2BJ 51376	111	54-A
2BJ 51378	111	54-I
2BJ 51379	111	54-I
BJ20 51381	83	41-J
BJ20 51382	83	41-J
BJ20 51402	113	55-B
BJ25 51421	117	57-H
BJ 51900	114	
BJ 51911	114	56-J
BJ 51912	114	56-B
BJ 51913	114	56-D
BJ 51914	114	56-C
BJ 51915	114	56-I
BJ 51916	114	56-A
BJ25 52101	117	57-AF
BJ25 52102	117	57-AE
BJ25 52103	117	57-AD
BJ25 52104	118	57-AH
BJ25 52105	117	57-AA
BJ25 52106	118	57-AM
BJ25 52110	117	
BJ25 52115	117	57-AB
BJ25 52124	117	57-AC
BJ25 52141	118	57-AI
BJ25 52145	118	57-AK
BJ25 52156	118	57-AS
BJ25 52157	118	57-AP
BJ25 52201	117	57-A
BJ25 52203	117	57-L
BJ25 52204	117	57-E
BJ25 52205	117	57-N
BJ25 52210	117	
SG 52223	117	57-S
RK 52225	117	57-D
BJ25 52244	117	57-C
52247	54	24-W
52248	54	24-AE
BJ25 52253	117	57-M
A 52263A	52	24-O
A 52264A	52	24-O
BJ25 52501	117	57-Z
BJ25 52502	118	57-AQ
BJ25 52505	118	57-BE
BJ25 52506	118	57-BE
BJ25 52510	117	
BJ25 52520	118	
BJ25 52531	118	57-AR
BJ25 52532	118	57-AR
BJ25 52551	118	57-BC
BJ25 52552	118	57-BC
BJ25 52553	118	57-BD
BJ 52554	118	57-BA
BJ25 52554	118	57-BD
BJ25 53110	117	57-R
BJ25L 53110	117	57-R
BJ 53134	113	55-AB
BJ25 53301	120	58-I
BJ25L 53301	120	58-AE
BJ25 53302	118	58-A
BJ25 53306	62	30-A
BJ25L 53306	62	30-A
RK 53319	120	58-Q
BJ25 53321	118	58-B
RK 53321	120	58-R
BJ25 53322	118	58-C
BX 53344	118	58-D
BJ25 53371	100	49-D
BJ25L 53371	100	49-D
BJ25 53372	100	49-E
BJ 53373	100	49-F
BJ25 53373	100	49-G
BX 53417	67	33-O
BX 53418	122	59-G
BX 53422	122	59-H
2BJ 54100	120	58-U
RR 54200	120	58-AB
54303	58	26-S
54309	58	26-T
54317	58	26-W
54327	58	26-Y
54332	58	26-X
54335	58	26-Z
54336	58	26-AA
54337	58	26-V
54340	58	26-Q
54341A	58	26-O
54341B	58	26-P
54343	56	26-G
54345	58	26-R
54348	56	26-B

INDEX

PART NUMBER		PAGE	FIGURE NUMBER
	54353	56	26-A
	54354A	56	26-D
	54357	56	26-C
	54358	58	26-AC
	54359	58	26-AB
	54362	56	26-E
	54368	56	26-F
	54371C	56	26-K
	54372	56	29-J
	54373	56	26-H
	54374B	56	26-I
2BJ	54400	120	58-AD
BJ25L	54400	120	58-AD
BM	54428	122	59-J
2BJ	54500	120	58-S
2BJ	54600	120	58-T
	54713B	129	63-AE
	54720	129	63-Y
	54721	129	63-W
	54722B	129	63-S
	54727B	129	63-T
	54739	129	63-O
	54755	130	63-AR
	54769	129	63-N
	54770	129	63-L
BX	54800	127	62-C
BX	54900	127	62-D
2BJ	55100	122	
FA	55101	122	60-G
RS	55102	124	60-K
RS	55103	122	60-F
2BJ	55104	124	60-O
2BJ	55106	124	
2BJ	55110	124	
RS	55111	122	60-A
RS	55112	122	60-B
RS	55113	122	60-E
RS	55114	124	60-H
RS	55115	124	60-L
RS	55116	124	60-S
RS	55117	124	60-P
RS	55118	124	60-R
RS	55119	124	60-Q
RS	55121	124	60-M
RS	55122	124	60-N
2BJ	55200	124	
2BJ	55202	124	60-W
BJ	55206	124	60-V
BM	55224	126	61-M
BM	55226	124	61-J
BJR	55300	120	58-G
2BJ	55300	126	
BJ20	55301	126	61-P
2BJ	55302	126	61-Q
2BJ	55313	124	60-X
2BJ	55313	126	61-R
BM	55401	124	61-G
BM	55411	124	61-B
RR	55411	124	60-T
RR	55411	126	61-N
BM	55412	124	61-K
RR	55412	124	60-U
RR	55412	126	61-O
BM	55413	124	61-D
BM	55414	124	61-L
BX	55415	120	58-O
BM	55422	124	61-A
BM	55423	124	61-C
BM	55425	124	61-E
BJ20	55600	120	58-P
BH26	55700	127	62-F
BJ	55700	124	
BJ	55701	124	61-H
FQS	55701	127	62-E
RK	55703	127	62-G
2BJ	55800	126	
2BJ	55802	126	61-Q
2BJ	55812	126	61-O
BJ25	56104	122	59-L
BJ25	56110	122	59-E
BJ25L	56110	122	59-E
RS	56112	122	99-D
BJ25	56120	122	59-N
BJ25L	56120	122	59-N
BJ25	56130	122	59-C
BJ25L	56130	122	59-C
BJ25	56140	122	59-M
BJ25L	56140	122	59-M
BJ	56151	122	59-P
BJ27	56160	122	59-K
BJ25L	56160	122	59-K
BX	56311	120	58-H
BX	56311	124	61-F
BX	56311	126	61-P
BX	56411	122	59-I
BXL	56413	122	59-F
SG	56415	122	59-F
2BJ	56500	122	59-B
BJ27	56601	120	58-N
BJ27	56610	120	
RS	56910	122	59-A
BJ25	57100	120	
BJ25L	57100	120	
BJ25	57110	120	58-Z
BJ25L	57110	120	58-AH
BJ25	57120	120	58-AA
BJ25	57130	120	58-AC
BJ25	57140	120	58-X
BJ25L	57140	120	58-AF
BJ25	57150	120	58-Y
BJ25L	57150	120	58-AG
BX	57300	75	37-U
BJ25	57500	44	20-H
RK	57601	120	58-W
BJ20	58210	134	65-Z
BJ20	58211	134	65-AC
BJ20	58212	134	65-AU
BJ20	58213	134	65-Y
BJ20	58220	134	65-AT
BJT	58537	129	62-B
BJT	58600	127	62-A
BY	58600	129	
BY	58610	129	63-K
BJ27	58611	117	57-X
BY	58620A	129	63-P
BY	58625A	129	63-Q
BY	58630	129	63-J
BY	58632	129	63-AB
BY	58633	129	63-AD
BY	58635	129	63-AC
BY	58636	129	63-AG
BY	58640	129	63-R
BY	58645	129	63-AF
BY	58648	129	63-U
BY	58649	129	63-V

INDEX

PART NUMBER	PAGE	FIGURE NUMBER
BY 58650A	129	63-C
BY 58651	129	63-X
BY 58670	129	63-AI
BY 58671	130	63-AK
BY 58672	129	63-AJ
BY 58680	130	63-AQ
BY 58681	130	63-AP
BY 58690	129	63-H
BY 58694	129	63-I
BY 58695	129	63-G
BY 58697	129	63-F
BY 58700	129	
BY 58730	129	63-J
BY 58790	129	63-H
BY 58800	130	
BY 58801	130	63-AS
BY 58810	54	25-L
BY 58810	130	63-AV
BY 58813	130	63-AX
BY 58831	54	25-K
BY 58831	130	63-AU
BY 58832	130	63-AT
BY 58836	130	63-AZ
BY 58837	130	63-AY
BY 58840	130	63-BB
BY 58843	130	63-BE
BY 58850	54	25-J
BY 58850	130	63-AW
BJ25 59100	134	65-W
BJ25 59102	117	57-B
BJ25 59103	117	57-F
BJ25 59201	120	58-J
BJ25 59217	134	65-X
BJ25 59300	132	
BJ25 59301	132	65-T
BJ25 59302	132	65-T
BJ25 59303	134	65-V
BJ25 59331	132	65-U
BJ25 59400	132	
BJ25 59401	132	65-R
BJ25 59402	132	65-S
BJ25 60000	134	
BJ25 60001	134	65-AW
BJ25 60002	134	65-AX
BJ25 61104	134	65-AV
BJ25 61109	134	65-AO
BJ25L 61109	134	65-AO
BJ25 61128	44	20-S
BJ25 61129	44	20-S
RS 61213	134	65-AQ
BJ25 61219	44	20-C
BJ25 61402	134	65-AL
BJ25 61422	134	65-AK
BJ25 62201	132	65-O
BJ25 62202	130	64-F
BJ25 62211	132	65-Q
BJ25 62212	132	65-P
BJ25 62221	130	64-I
BJ25 62222	132	64-U
BJ25 62301	130	64-A
BJ25 62302	130	64-Q
BJ25 62303	132	64-S
BJ25 62304	130	64-B
BJ25 62313	130	64-C
BJ25 62321	130	64-O
BJ25 62322	130	64-N
BJ25 62323	132	64-T
BJ25 62324	130	64-J
BJ25 62325	130	64-G
BJ25 62326	130	64-H
BJ25 62401	134	65-AP
BJ25 62402	134	65-AP
BJ25 63101	132	65-K
BJ25 63102	134	65-AH
BJ25 63103	132	65-J
BJ25 63104	132	65-L
BJ25 63109	134	65-AG
BJ25 63110	132	
BJ25 63111	132	65-E
BJ25 63112	132	65-E
BJ25 63113	132	65-F
BJ25 63114	132	65-D
BJ25 63115	132	65-G
BJ 63117	134	65-AM
BJ25 63120	132	
BJ25 63510	132	
BJ25 63511	132	65-A
BJ25 63512	134	65-AE
RS 63512	120	58-V
BJ25 63513	134	65-AF
BJ25 63514	134	65-AD
BJ25 66010	136	
BJ25L 66010	136	
BJ25 66020	136	
BJ25L 66020	136	
BJ25 66030	136	
BJ25 66110	136	66-L
BJ25L 66110	136	66-Q
BJ25 66120	136	66-N
BJ25L 66120	136	66-P
BJ25 66130	136	66-H
BJ25 66210	136	66-A
BJ25 66220	136	66-M
BJ25L 66220	136	66-O
BJ25 66230	136	66-E
BJ25 66510	136	66-B
BJ25 66520	136	66-F
BJ25 66530	136	66-G
RS 66911	136	66-D
BJ 66753	113	55-AC
BX 67121	129	63-AH
BJR 68350	132	65-I
BJ 69200	132	
BJ 69202	132	65-M
BJ 69210	132	65-N
3BMV 75601	134	65-AN
RS 81112	117	57-K
BM 81415	118	57-AT
A 277450A	50	23-F
BX 277510	50	23-E
BX 277610	50	23-N
BX 277710	50	23-C
A 277730A	50	23-A
A 277790A	50	24-B
523003	52	24-A
523022A	54	24-AC
523022B	54	24-AD
523023	52	24-B
523024	52	24-I
523060	52	24-N
523109	54	24-AM
523110	54	24-AN
523111	54	24-AO
523222	56	25-Q
523224	54	25-I

PART NUMBER	PAGE	FIGURE NUMBER	PART NUMBER	PAGE	FIGURE NUMBER	PAPT NUMBER	PAGE	FIGURE NUMBER
523228	56	25-W	523236	56	25-R	523253	56	25-AO
523234	56	25-V	523237	56	25-T			

HOW TO USE THE INDEX FOR TOYOTA UNIVERSAL PARTS

1. Toyota Universal Parts used for Models BJ 25 and BJ 25L are specifically grouped in this index so that they can be traced easily in this catalog.
2. Different from the part numbers of ordinary parts, the part numbers of Toyota Universal Parts represent the outlines of their individual shapes measurements and special treatments incorporated therein.

   Please refer to the following explanation of the parts concerned:

Bolt

J	B	N	0 6	1 5	Z
Shape of Head	Initial of Bolt	Material	Diameter of Screw Part	Length Excluding Head	Plating or other Treatment

It is self-explanatory that this part JBN 0615Z is a standard JES (Japan Engineering Standard) bolt with screw diameter of 6mm and length of 15mm excluding head. Also, it is made of soft steel (N), zinc plated (Z).

Screw

S	F	0 4	1 2	Z
Shape of Head	Initial of Screw	Diameter of Screw Part	Length	Plating or other Treatment

This part SF 0412Z is a screw of a flat head with the screw diameter of 4mm and length of 12mm excluding head, zinc plated.

Nut

C	N	N	1 6	1 2	T
Shape of Head	Initial of Nut	Material	Diameter of Screw Part	Height	Plating or other Treatment

This part CNN 1612T is a nut made of soft steel with screw diameter of 16mm and height of 12mm, also, with special hexagon head.

Washer

P	W	L	2 5	0 8	Z
Kind of Washer	Initial of Washer	Shape of Section	Japanese Way of reading Diameter	American Way of reading Diameter	Anticorrosive Treatment

This part PWL 2508Z is a 5/16 inch steel washer for 8mm screw, zinc plated.

Cotter pin

W	P	1 6	2 0
Shape of Cotter pin	Initial of Cotter pin	Diameter 1.6mm × 10	Length Excluding Head

This part WP 1620 is a cotter pin with diameter of 1.6mm and length of 20mm.

INDEX

BOLT

JBN
TBN

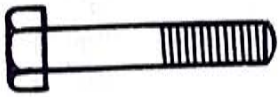

TBK
YBK
YBT

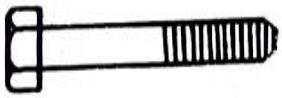

MBN
MBT

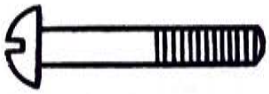

SBN

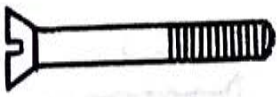

PART NUMBER	PAGE	FIGURE NUMBER
BH 0610	56	25-AK
JBN 0612	96	47-W
JBN 0612	107	52-AA
JBN 0612TZ	61	29-A
JBN 0615	47	21-AG
JBN 0615	117	57-Q
JBN 0615	122	59-T
JBN 0615	130	63-BA
JBN 0615T	46	21-L
JBN 0615Z	117	57-Y
JBN 0620	69	33-AD
JBN 0630	44	20-I
JBN 0635TZ	35	17-H
JBN 0645TZ	31	14-L
JBN 0665TZ	79	38-AC
JBN 0815	107	52-X
MBN 0308	107	52-W
MBN 0312Z	132	65-H
MBN 0410	120	58-K
MBN 0410	127	62-H
MBN 0515	124	60-I
MBN 0515Z	118	57-BB
MBN 0515Z	130	64-P
MBN 0608	22	10-K
MBN 0612	22	9-R
MBN 0620Z	31	14-AD
MBT 0406	122	60-C
SBN 0815	71	34-AO
SBN 0815	73	36-X
TBK 0815	61	29-L
TBK 0820	84	41-AC
TBK 0820	91	45-AE
TBK 0820	101	49-AG
TBK 0830	73	36-Q
TBK 0830	118	57-AL
TBK 0830T	96	47-AD
TBK 1012T	61	29-AC
TBK 1028T	73	36-S
TBK 1028T	84	41-AH
TBK 1028T	91	45-AI
TBK 1040	73	36-U
TBK 1240	100	49-T
TBK 1245	113	55-J
TBK 1250	114	56-H
TBK 1387W	11	6-X
TBN 0815	46	21-G
TBN 0815	73	36-I
TBN 0815	75	37-R
TBN 0815	83	41-A
TBN 0815	86	42-Z
TBN 0815	92	42-Z
TBN 0815	89	45-X
TBN 0815	105	51-H
TBN 0815	107	52-AD
TBN 0815	113	55-E
TBN 0815	118	57-AU
TBN 0815	122	59-S
TBN 0815Z	29	13-M
TBN 0815Z	100	49-A
TBN 0815Z	117	57-U
TBN 0815Z	126	66-I
TBN 0815TZ	31	14-J
TBN 0820	28	13-A
TBN 0820	58	27-A
TBN 0820	69	33-X
TBN 0820	73	36-E
TBN 0820	77	37-AI
TBN 0820	83	41-I
TBN 0820	89	45-I
TBN 0820	102	49-BD
TBN 0820	113	55-O
TBN 0820T	21	9-J
TBN 0820Z	48	22-F
TBN 0820Z	100	49-H
TEN 0820TZ	39	18-AK
TBN 0820TZ	40	18-AK
TBN 0820TZ	41	18-AK
TBN 0825	61	29-U
TBN 0825	75	36-AI
TBN 0825	89	45-I
TBN 0825	109	53-L
TBN 0830T	26	11-Q
TBN 0830Z	50	22-AJ
TBN 0830Z	129	63-E
TBN 0835T	62	30-C
TBN 0840W	79	38-V
TBN 0840Z	24	10-AC

INDEX

PART NUMBER	PAGE	FIGURE NUMBER
TBN 0850	101	49-AD
TBN 1020	35	16-M
TBN 1020	79	38-U
TBN 1020Z	31	14-O
TBN 1025	35	16-H
TBN 1030	73	36-A
TBN 1035	64	31-T
TBN 1040	94	46-U
TBN 1055	62	30-Y
TBN 1225Z	31	14-S
TBN 1230	24	11-F
TBN 1240	114	56-E
TBN 1260	84	42-S
TBN 1260	92	42-S
TBT 1030T	96	47-K
YBK 1025T	33	15-Z
YBK 1030Z	11	6-E
YBK 1030Z	33	15-X
YBK 1035Z	33	15-AE
YBN 1015	69	33-AM
YBN 1020Z	48	22-X
YBN 1025	73	36-Q
YBN 1030	67	33-Q
YBN 1030	79	38-U
YBN 1225Z	54	24-AJ
YBN 1230	20	9-A
YBT 1458T	17	7-AJ

SCREW

CS

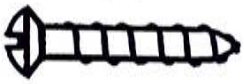

SF

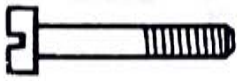

CS 0819Z	136	66-C
SF 0404	58	26-U
SF 0406Z	54	25-A
SF 0407	52	23-V
SF 0408	52	23-W
SF 0410	50	23-J
SF 0412Z	56	25-AH
SF 0508	56	25-AA
SF 2525Z	130	63-AO
SP 1015.5Z	54	24-AH
SP 1022ZC	50	22-AO
SR 03.512	54	24-AA
SR 0406	50	22-AK
SR 0408	50	22-AI
SR 0508Z	48	22-I
SR 0530	48	22-AA

NUT

JNN
JNT

FNT

LNN
LNT

CNN

CNN 1009	83	41-L
CNN 1009	89	45-D
CNN 1311	11	6-Z
CNN 1311	94	46-AJ
CNN 1311	109	53-Y
CNN 1311	111	54-C
CNN 1612T	84	42-P
CNN 1612T	91	42-P
CNN 1612T	92	46-D
CNN 1913	75	36-AN
FNT 0605	31	14-H
FNT 0605	35	17-J
JNN 0605	35	17-K
JNN 0605	47	21-AI
JNN 0605	79	38-AD
JNN 0605	107	52-AC
JNN 0806	107	52-AI
JNN 1913	101	49-AK
JNT .0303	107	52-U
JNT 0303	132	65-B
JNT 0404	118	58-F
JNT 0404	124	60-Y
JNT 0404	126	61-T
JNT 0404	127	62-J
JNT 0404	130	64-E
JNT 0504	118	57-BG
JNT 0504	130	64-K
JNT 0605	31	14-AB
JNT 0605	33	15-L
JNT 0605	46	21-A
JNT 0605	117	57-I
JNT 0605	122	59-V
JNT 0605	130	63-BD

INDEX

PART NUMBER	PAGE	FIGURE NUMBER
JNT 0605	134	65-AB
JNT 0605Z	118	57-AG
LNN 0805	62	29-AM
LNN 0805	62	30-B
LNN 0805	101	49-AR
LNN 1006	22	10-D
LNN 1006	64	30-AJ
LNN 1206	62	30-L
LNN 1308	100	49-M
LNN 1405	101	49-AZ
LNN 1405T	61	29-D
LNT 0504T	19	8-J
nH 0404Z	56	25-AJ
nH 0604	129	63-Z
nH 1004FZ	54	25-E
nH 1006FZ	54	25-D
NH 0403	56	26-L
NH 1004F	54	24-AK
NH 1004FZ	52	24-H
NHB06055A	50	23-K
TNN 0605	44	20-K
TNN 0806	26	11-O
TNN 0806	29	13-H
TNN 0806	46	21-D
TNN 0806	48	22-U
TNN 0806	62	30-Q
TNN 0806	83	41-F
TNN 0806	89	45-F
TNN 0806	101	49-AA
TNN 0806	107	52-AJ
TNN 0806	109	53-N
TNN 0806	113	55-C
TNN 0806	117	57-W
TNN 0806	122	59-Q
TNN 0806Z	26	12-C
TNN 0806Z	100	49-B
TNN 0806Z	129	63-A
TNN 0806Z	134	65-AR
TNN 1008	19	8-F
TNN 1008	29	13-T
TNN 1008	33	15-E
TNN 1008	35	16-J
TNN 1008	64	31-V
TNN 1008	73	36-T
TNN 1008	77	37-AQ
TNN 1008	84	41-AJ
TNN 1008	91	45-AK
TNN 1008	94	46-Y
TNN 1008	109	53-P
TNN 1008	111	54-M
TNN 1008	113	55-S
TNN 1008	118	57-AW
TNN 1008Z	19	8-G
TNN 1008Z	24	11-E
TNN 1008Z	31	14-Q
TNN 1008Z	33	15-F
TNN 1008Z	46	21-P
TNN 1210	62	30-E
TNN 1210	96	47-Z
TNN 1210	113	55-G
TNN 1210	114	56-G
TNN 1210Z	31	14-V
TNN 1210Z	52	24-J
TNN 1311	109	53-E
TNN 1311	111	54-X
TNN 1411	103	50-N
TNN 1613	111	54-Z
TNN 1613	134	65-AI

WASHER

SW

IW

PW

IW 0804	127	62-I
PWH 2508	118	57-AJ
PWL 0403	132	65-C
PWL 0635	61	29-Y
PWL 0804	132	64-V
PWL 1005	130	64-M
PWL 2006	31	14-AC
PWL 2006	36	17-L
PWL 2006	117	57-G
PWL 2006	132	64-R
PWL 2006Z	117	57-O
PWL 2508	28	13-F
PWL 2508	48	22-D
PWL 2508	62	30-O
PWL 2508	113	55-W
PWL 2508	118	57-AV
PWL 2508	129	63-D
PWL 2508	136	66-K
PWL 2508Z	46	21-V
PWL 0010	29	13-V
PWL 0010	35	16-S
PWL 0010	48	21-AK
PWL 0010	62	30-M
PWL 0010	77	37-AN
PWL 0010	118	57-AY
PWL 0010Z	48	22-Z
PWL 0012	77	38-Q

INDEX

PART NUMBER	PAGE	FIGURE NUMBER
PWL 4013	94	46-AI
PWL 4013	109	53-G
PWL 5016	92	46-C
PWL 5016	109	53-X
PWL 5016	111	54-D
PWL 5016	134	65-AJ
PWT 2006Z	46	21-Q
PWT 4013	11	6-H
PWT 6019	75	36-AM
SWH 03	107	52-V
SWH 04	118	58-E
SWH 04	122	60-D
SWH 04	126	61-S
SWH 05	124	60-J
SWH 05	124	61-I
SWH 06	22	9-Q
SWH 06	22	10-J
SWH 06	31	14-I
SWH 06	33	15-M
SWH 06	35	17-I
SWH 06	46	21-J
SWH 06	61	29-B
SWH 06	69	33-AE
SWH 06	96	47-X
SWH 06	107	52-AB
SWH 06	122	59-U
SWH 06	130	63-BC
SWH 06	134	65-AA
SWH 08	21	9-I
SWH 08	24	10-AB
SWH 08	26	11-P
SWH 08	26	12-D
SWH 08	29	13-G
SWH 08	31	14-K
SWH 08	39	18-AL
SWH 08	40	18-AL
SWH 08	41	18-AL
SWH 08	46	21-E
SWH 08	48	22-E
SWH 08	61	29-M
SWH 08	62	30-P
SWH 08	69	33-Y
SWH 08	73	36-F
SWH 08	75	37-I
SWH 08	83	41-B
SWH 08	84	42-F
SWH 08	91	42-F
SWH 08	89	45-G
SWH 08	96	47-AC
SWH 08	101	49-AB
SWH 08	105	51-G
SWH 08	107	52-AH
SWH 08	109	53-M
SWH 08	113	55-D
SWH 08	117	57-V
SWH 08	122	59-R
SWH 08	129	63-B
SWH 08	134	65-AS
SWH 08	136	66-J
SWH 10	11	6-F
SWH 10	15	7-H
SWH 10	24	11-D
SWH 10	29	13-U
SWH 10	31	14-P
SWH 10	33	15-AA
SWH 10	35	16-I
SWH 10	46	21-O
SWH 10	48	22-Y
SWH 10	62	30-X
SWH 10	64	31-U
SWH 10	67	33-R
SWH 10	73	36-B
SWH 10	77	37-AP
SWH 10	77	38-T
SWH 10	84	41-AI
SWH 10	91	45-AJ
SWH 10	94	46-X
SWH 10	96	47-J
SWH 10	109	53-Q
SWH 10	111	54-N
SWH 10	113	55-R
SWH 12	31	14-U
SWH 12	52	24-K
SWH 12	62	30-D
SWH 12	84	42-T
SWH 12	92	42-T
SWH 12	100	49-U
SWH 12	113	55-H
SWH 12	114	56-F
SWH 13	109	53-F
SWH 13	111	54-W
SWH 14	103	50-O
SWH 19	101	49-AL
SWL 04	130	64-D
SWL 05	86	43-L
SWL 05	96	47-AF
SWL 05	118	57-BF
SWL 05	130	64-L
SWL 06	44	20-J
SWL 06	117	57-J
SWL 06Z	117	57-P
SWL 08	118	57-AZ
SWL 08Z	100	49-C
SWL 10	83	41-W
SWL 10	91	45-AA
SWL 10	118	57-AX
SWL 14	61	29-E
SWL 16	111	54-Y
SWT 4013	100	49-L
WP 4	50	23-H
WP 4Z	56	26-N
WP 5Z	130	63-AM
WP 10	54	25-G
WP20X5.2X0.8ZC	130	63-AL
WS 4	50	22-AH
WS 4	50	23-I
WS 4	54	25-B
WS 4	56	26-M
WS 4	129	63-M
WS 5	48	22-G
WS 5	56	25-AB
WS 5	130	63-AN
WS 6	54	24-Z
WS 6	56	25-AL
WS 7	48	22-AE
WS 10	54	24-AL
WS 10	54	25-F

COTTER PIN

W P

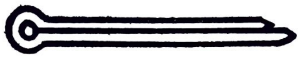

PART NUMBER	PAGE	FIGURE NUMBER
PO 1612	56	25-AP
WP 1620	103	50-G
WP 1625	73	36-M
WP 1625	83	41-U
WP 1625	89	45-Y
WP 2012	62	29-AL
WP 2015	46	21-T
WP 2015	77	38-A
WP 2015	117	57-T
WP 2020	16	7-N
WP 2025	83	41-K
WP 2025	89	45-J
WP 2025	94	46-AC
WP 3018	61	29-Z
WP 3018	77	38-P
WP 3020	11	6-AA
WP 3020	48	21-AL
WP 3025	109	53-Z
WP 3025	111	54-B
WP 3028	94	46-AL
WP 3040	92	46-N
WP 4025	84	42-Q
WP 4025	91	42-Q
WP 4035	92	46-E
WP 4040	75	36-AO

~~BRT 14205~~

~~RS2/ 43152~~

PRINTED BY YAGI PRINTING INDUSTRIAL CO., LTD.

トヨタ純正部分品

TOYOTA

GENUINE PARTS

TOYOTA MOTOR